CNC SYSTEMS

OSP5020M
OSP500M-G

VR-40

MAINTENANCE MANUAL (2nd Edition)

ME34-018-R2

SAFETY PRECAUTIONS

The OSP5020M/OSP500M-G uses various electrical parts to operate machining centers. To prevent accidents or machine malfunctions, conduct inspection or maintenance work following the instructions below:

1. To stop the machine on occurrence of abnormality, press the **EMERGENCY STOP** button on the operation panel.
2. The person responsible for maintenance should grasp the points of inspection or repair before maintenance work.
3. When two or more persons conduct maintenance work, they should cooperate each other by exchanging signs and information.
4. Turn off the power before replacing parts or checking wiring connections.
5. After removing parts for maintenance or inspection, return it to the original position and tighten them securely with mounting screws.
6. Use calibrated measuring instruments for measuring inspections such as voltage check.
7. Use great care in handling the following high-voltage units.
   - Main breaker
   - Servo drive unit
   - VAC drive unit
   - Power cables
8. Do not touch the switches and parts with wet hands.
9. Do not leave flammable articles or metallic parts inside the control panel or the terminal box.
10. After maintenance work, be sure to close the doors of the control box and the operation panel.
11. Be sure to turn off the power or stop the machine and make sure of the safety before cleaning on inspecting the machine. Never attempt such work during machine operation.

Note: *Refer to the Operation and Maintenance Manual for NC Machining Center for safety precautions in machine operations.*

Symbols

This manual uses the following symbols to emphasize the items which demand strict observation.

REMARKS : Precaution in machine operations.

Default of this item may affect the machining accuracy and smooth operation.

CAUTION : Default of this item may cause machine trouble or damage, or operator injury.

More care must be exercised to this item than those indicated by "REMARKS".

WARNING :

Default of this item causes not only machine damage but also a serious accident may result including loss of life.

Sufficient care must be paid to this item.

TABLE OF CONTENTS

PAGE

SAFETY PRECAUTIONS

SECTION 1 OUTLINE OF OSP5020M/OSP500M-G SERIES 1

1. Special Features of OSP5020M/OSP500M-G Series 1
2. Summary of Operation 2

3. Structure of OSP5020M/OSP500M-G 3
   3-1. CPU and Power Supply Unit 3
   3-2. Electrical Control Unit (Field Network) 3
   3-3. Servo Drive Unit 4
   3-4. Relay and Magnet Circuits 4
   3-5. Spindle Drive VAC Motor Control 4
   3-6. Floppy Disk Drive Unit (optional) 4
   3-7. Tape Reader (optional) 4
   3-8. Control Enclosure 5
   3-9. Operation Panel 5
   3-10. Absolute Position Feedback Encoders 5
   3-11. Cooling Unit 5

SECTION 2 MAINTENANCE AND INSPECTION 6

1. Inspection during Installation 6
   1-1. Installation Site 6
   1-2. Environmental Requirements 6
   1-3. Power Supply Voltage Inspection 7

2. Periodical Inspection 7

3. Operation and Structure of the NC 10
   3-1. Example of Operation 10
   3-2. Description on Each Major NC Unit 11

SECTION 3 TROUBLE AND TROUBLESHOOTING 14

1. Analysis of Trouble 15
2. Loading (For the Model Equipped with the Floppy Disk Drive) 16

3. Machine-Mounted Electricals 20
   3-1. Inspection of Limit Switches by Multimeter 21
   3-2. Inspection of Limit Switch by NC Check Data Display 22
   3-3. Inspection of Solenoid by NC Check Data Display 23

PAGE

4. Brushless Servomotor Drive Unit 24
4-1. BDU-A Series 24
4-1-1. Configuration of BDU-A 25
4-1-2. Protection and Alarm Monitoring Function (BL-D**A Series) 29
4-1-3. Trouble and Troubleshooting 30

4-2. BDU-D Series Servo Drive Unit 36
4-2-1. Protection Functions 36
4-2-2. Trouble and Troubleshooting 39
4-2-3. Precaution to Observe for Maintenance 45

5. Release of Stroke End Limit 46
6. Inspection of Position Encoder 47

7. CPU 48
7-1. Operation and Structure of the CPU 48
7-2. Checking CPU Operations 50
7-3. CPU Power Supply 51

8. EC I/O Unit 52
8-1. Fieldnet Input Photocoupler Card (FIPC) 53
8-2. Fieldnet Output High Transistor Card (FOHT) 54
8-3. Fieldnet Output Power Transistor Card (FOPT) 55
8-4. Communication Control Optical Card (Inside the terminal box) (CCOP) 56
8-5. Communication Control Optical Card (Inside the control box) (CCOP2, CCOP3) 56

9. Relay and Magnet Switch Circuits 57
9-1. Operation and Structure of a Relay and Magnet Switch Circuit 57
9-2. Inspection of Relays and Magnet Contactors 58

10. Replacing ECP-Ⅱ Battery Pack 60

SECTION 4 SPINDLE DRIVE UNIT FOR VAC MOTOR (VACⅡ) 61

1. Outline 61
2. Periodical Inspection and Maintenance 61

3. Constructions 62
3-1. Arrangement of Major Component Parts 63

PAGE

4. Operation Status Indication 70
   4-1. Control PCB Operation Status Indicating Lamps 70
   4-2. Operation Status Indicating Lamps 71
      4-2-1. Normal Operation Status Indication 72
      4-2-2. Failure Operation Status Indication 73
5. Troubleshooting 81
   5-1. Confirmation of Power Supply and Connectors 81
   5-2. Trouble and Troubleshooting 82
   5-3. Recovery from Failure Status 100
   5-4. Check Terminals 101
6. Fuse Replacement 105
   6-1. Fuse Blown Condition 105
   6-2. Inspection and Replacement Procedure for Fuses 106
   6-3. Fuse Rating 108
7. Spare Parts 108

SECTION 5 SELF-DIAGNOSTICS 109

1. Alarm Display and Error Display 110
2. Check Data Display 111
3. NC Diagnostic Display 138
4. Machine Diagnostic Display 138

SECTION 6 MACHINE OPERATIVE CONDITIONS, DIAGNOSIS MESSAGES AND LOGIC TABLES 139

1. Machine Operative Conditions 139
2. Diagnosis Message Display 140
3. ATC/APC Operation 152
   3-1. ATC 152
4. Special Operation 154
   4-1. Spindle No Tool Interlock 154
5. Logic Table 155
   5-1. How to Read Logic Tables 155

PAGE

SECTION 7 ARRANGEMENTS OF ELECTRICAL PARTS OPERATION PANELS, AND THE LIKE 166

1. OSP5020M/OSP500M-G Electrical Spare Parts List 166
2. NC Operation Panel (OSP5020M) 167
3. NC Operation Panel 168
4. Machine Operation Panel (OSP5020M) 169
5. Pulse Handle 170
6. Operation Panel (Power On) 171
7. Manual Tool Change Operation Panel 172
8. Magazine Manual Operation Panel 173
9. APC Operation Panel for Rotary Type 2-pallet APC 174

SECTION 1 OUTLINE OF OSP5020M/OSP500M-G SERIES

1. Special Features of OSP5020M/OSP500M-G Series

Based on the OSP series that has an outstanding production record as a CNC all over the world, the OSP5020M/OSP500M-G series is a high-performance computerized numerical control system that functions as an Intelligent Manufacturing Cell (IMC) forming an operator untended production system.

(1) A Multiprocessor CNC System

The OSP5020M/OSP500M-G is a multiprocessor CNC system using plural high-performance microprocessors, and features architectures capable of coping of high-level NC functions.

(2) Versatility

Through distributed processing by the multiprocessor, the OSP5020M/OSP500M-G provides versatile functions not available on existing NCs, such as alarm monitor data processing, link with high-level computers, advanced online automatic programming function, and large-capacity part program storage. This CNC is complete also with functions such as diagnostics and operation guides, display of alarm data and display of production control information, by means of the CRT.

(3) Tremendously Expandable, Never Obsolete

The computer software is stored in the bubble memory. Therefore, it is easy to change the software, enabling any addition and alteration of functions in the future, and this OSP5020M/OSP500M-G can be used always as a most up-to-date system ready to meet the customer's application needs.

(4) High Reliability

High reliability is ensured by various kinds of functions such as automatic memory error correction, perfect noise isolation by a photo-coupler, high integration of hybrid ICs and LSIs, etc., reduced consumption power and thorough monitoring of CPU power supply, and by a simple structure mounted in the totally enclosed cabinet.

(5) Uniquely Designed for Easy Operation

Since a larged-sized CRT is provided as standard on an pendant type operation panel, it is exceedingly easy to operate.

2. Summary of Operation

The OSP5020M/OSP500M-G employs a closed loop system with absolute position feedback. The following is a brief summary of its operation:

The value (command value RCOM) which is read into the CNC in the form of taped commands generates path functions (operation value, RCON) within the CNC to produce a commanded tool path at the commanded feedrate. Also feedrate functions (operation value OCON) and multiplication of RCON by the acceleration/deceleration coefficient are generated.

Meanwhile, the OSP position encoder detects actual position signals (RAPA) of each axis. This OCON and RAPA are continuously compared, the difference (ODIF) between OCON and RAPA is added to the feedrate command and the result is input to the drive unit as motor drive current command. The drive unit controls the brushless servomotor so that value ODIF will be zeroed.

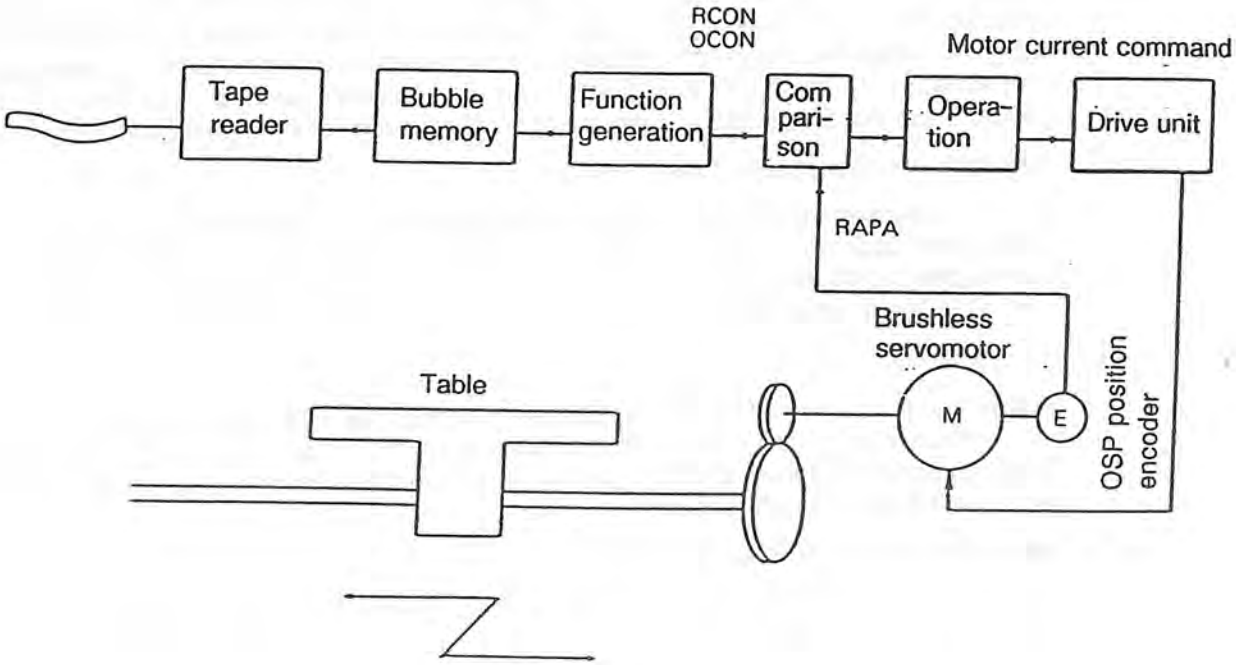

Fig. 1-1 Operation of OSP5020M/OSP500M-G

3. Structure of OSP5020M/OSP500M-G

This section outlines the overall structure of the OSP5020M/OSP500M-G. For further information, consult the following sections of this manual.

Section 2, 3. "Operation and Structure of the NC"

Section 3, "Trouble and Troubleshooting"

3-1. CPU and Power Supply Unit

This is the heart of the CNC system and consists of the following printed circuit board modules and units:

Printed Circuit Board:

MAIN BOARD-II B	Main processor
MAIN CARD 13	
MAIN CARD 11	
MAIN CARD 15	Either MAIN CARD 15 or MAIN CARD 16 is selected in accordance with the NC unit specification.
MAIN CARD 16	
BUBBLE CARD	Bubble memory
CRP BOARD-II C	CRT operation panel control processor
SVP BOARD-II D	Axis control processor
SVP CARD 1	
ECP BOARD-II A	Control processor for the machine except for axis control
FN CARD	Interface for field network

Optional:

FDC BOARD II	Printed circuit board to control reading and duplication of data stored on floppy disks.

The parts listed above are for standard system specifications. For optional specifications, printed circuit boards for selected functions will be added.

Power Supply Unit:

This supplies all the power required for CPU operation.

3-2. Electrical Control Unit (Field Network)

The interfaces input and output signals from and to the ECP board to control output to solenoids, magnets and other devices on the machine and input from machine mounted limit switches.

Power Supply Unit:

This supplies all the power required for the EC control unit.

3-3. Servo Drive Unit

The servo drive unit receives motor current command (digital value) output from the servo processor to control brushless servomotors which drive individual axes. This accurately controls movements of the table, spindlehead and others in accordance with the programmed commands.

The servo drive unit consists of the following units:

- DC power supply

  Supplies DC power to the servo amplifier unit.

- Servo amplifier unit

  Controls brushless servomotors in response to the command input from the servo processor.

3-4. Relay and Magnet Circuits

These circuits are used to control machine-mounted solenoids, electric motors, etc., and also conveys signals from machine-mounted operating pushbuttons and limit switches to the CPU.

The following panels are provided:

MS Panel:

Panel with magnetic switches

Relay Panel:

Panel with control relays

3-5. Spindle Drive VAC Motor Control

The main spindle of the machine is driven by a VAC motor.

The control unit receives speed command signals given from the CPU, in the form of analog voltage and controls the motor speed to the commanded speed.

3-6. Floppy Disk Drive Unit (optional)

A floppy disk is used to load NC control software.

As an optional feature, floppy disks are used for loading and duplicating machining programs.

3-7. Tape Reader (optional)

The tape reader is used to store taped commands into the CNC memory.

3-8. Control Enclosure

Arranged in a single enclosure are the CPU, drive unit, relay magnetic circuits, spindle motor drive unit and others.

The totally enclosed construction provides reliable protection against the entry of oil mist, chips, dust and dirt, ensuring stable performance of semiconductors, relays and magnetic switches.

Mounted on the common machine base, this space-saving CNC package forms a compact machine-control combination.

3-9. Operation Panel

All the controls necessary for operating the machine such as operating switches, manual switches and the pulse handle are incorporated into and mounted to this accessible pendant operation panel. A large-sized CRT is provided as standard, assuring ease of operation.

3-10. Absolute Position Feedback Encoders

To each servomotor for the X-, Y-, and Z-axis, the absolute position feedback encoder that produces accurate information concerning the instantaneous position of each axis is provided. The output signals from these encoders are fed into the CNC system for accurate positioning of each axis.

Attached to the main spindle is a main spindle pulse generator to detect the spindle speed.

Also, a position feedback encoder used to detect the position of the magazine to store cutting tools. A position feedback encoder for an additional axis is provided when the machine is equipped with an option such as rotary table.

3-11. Cooling Unit

The cooling unit provided at the top of the control box keeps the temperature inside the control enclosure less than 8°C (46.4°F) over room temperature. This provides the CNC system with higher reliability.

SECTION 2 MAINTENANCE AND INSPECTION

Daily checks greatly help to keep your CNC operating properly at all times. When any trouble occurs, integrated testing circuits within the CNC system will help you diagnose most malfunctions and pin-point their location quickly, thus enabling you to reset to normal operation with little inconvenience.

Consult also the following section:

Section 3, "Trouble and Troubleshooting"

1. Inspection during Installation

1-1. Installation Site

During initial installation, careful consideration should be given to easy access for inspection and maintenance purposes as well as for operation.

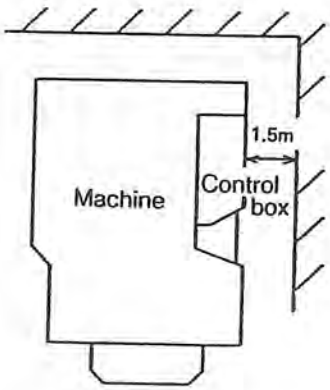

Fig. 2-1 Layout

Arrange the machine and the machine control unit as shown above.

Since the machine control unit doors must be opened and some space must be given for maintenance and inspection, install the machine and the machine control unit so that they are not close to a wall.

1-2. Environmental Requirements

Pay attention to the following items:

(1) Do not install the CNC system in a place exposed to direct sunlight.

(2) The CNC system should be kept away from chips, coolant, oil, etc.

(3) The site should be free of excessive vibration.

(4) Ambient temperature should be between 0°C (32°F) and 40°C (104°F).

(5) The site should be free of large electrical noise sources such as welding machines. (Power should be preferably drawn from the plant power source.)

(6) Avoid dirty and dusty areas.

1-3. Power Supply Voltage Inspection

The allowable variance in the input voltage for the CNC system is ±10% of the available input voltage. An excessive voltage drop because of insufficient power capacity in the plant will cause NC malfunctions. It will also be subject to unavoidable influence from other equipment. In such cases, proper measures should sometimes be taken against those sources.

2. Periodical Inspection

The CNC system incorporates highly advanced electronic circuits which are susceptible to moisture, oil, dirt, dust, and chips present in machine shops. Elevated temperatures within the enclosure may result from clogging of filters in the cooling unit.

Therefore, it is necessary to check and inspect the CNC unit regularly to assure trouble-free operation.

(1) Weekly Inspection

Tape Reader Light Receiving Surface:

Keep the light receiving glass surface clean at all times.

Clean carefully with gauze or soft cloth so as not to scratch it.

Perforated Tape Inspection:

Dirty, torn or worn out paper tape from excessive use may lead to NC malfunctions and troubles.

Floppy Disk Handling:

3.5" floppy disk

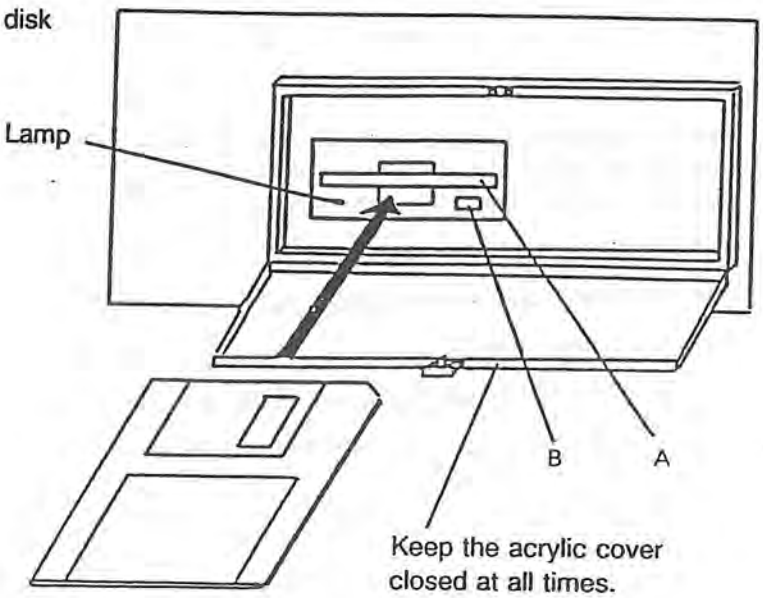

Fig. 2-2

1) Open the acrylic cover.
2) Insert a floppy disk into A in the above figure. Before inserting a floppy disk, confirm that it is facing the right direction, otherwise it cannot be inserted completely.
3) When the floppy disk is correctly inserted, reading of the floppy disk becomes possible.

4) Press down the portion B to remove the floppy disk.

5) Close the acrylic cover.

Note 1: *Before switching power off, make sure that a floppy disk is not in.*

Note 2: *Keep the acrylic cover closed at all times.*

Note 3: *The indicating lamp lights up while reading of the floppy disk is being executed.*

8" floppy disk

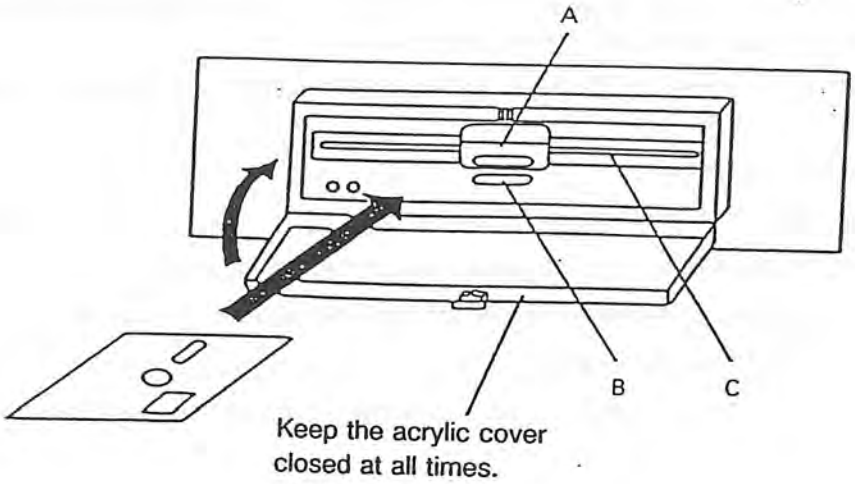

Fig. 2-3

1) Open the acrylic cover.

2) Press the portion B in the above figure, and insert a floppy disk into the slot C to set. The lamp at the upper left of the slot will then light up. Before inserting a floppy disk, be sure that it is correctly facing the right direction.

3) Press down the portion A to cover.

   Now, the floppy disk is ready to be read.

4) Close the acrylic cover.

Note 1: *Before switching power off, make sure that a floppy disk is not in.*

Note 2: *Keep the acrylic cover closed at all times.*

(2) Every Three Months Inspection

Cooling Unit Cleaning:

Make sure that the cooling unit on the control box operates to blow air hard. If the filter mesh screens are clogged, clean it.

Cooling Unit:

The cooling unit is provided on the left door of the machine control unit box to prevent the temperature rise in the control box, thus improving the reliability of the CNC system.

Maintenance and inspection:

Check the following items at least once every three months to keep the cooling unit functioning normally.

(a) Check for clogging in the filter. Clogging will raise the temperature in the control box to degrade the reliability of the CNC system. Always make sure there is good ventilation.

(b) Check that the cooling fan is rotating normally.

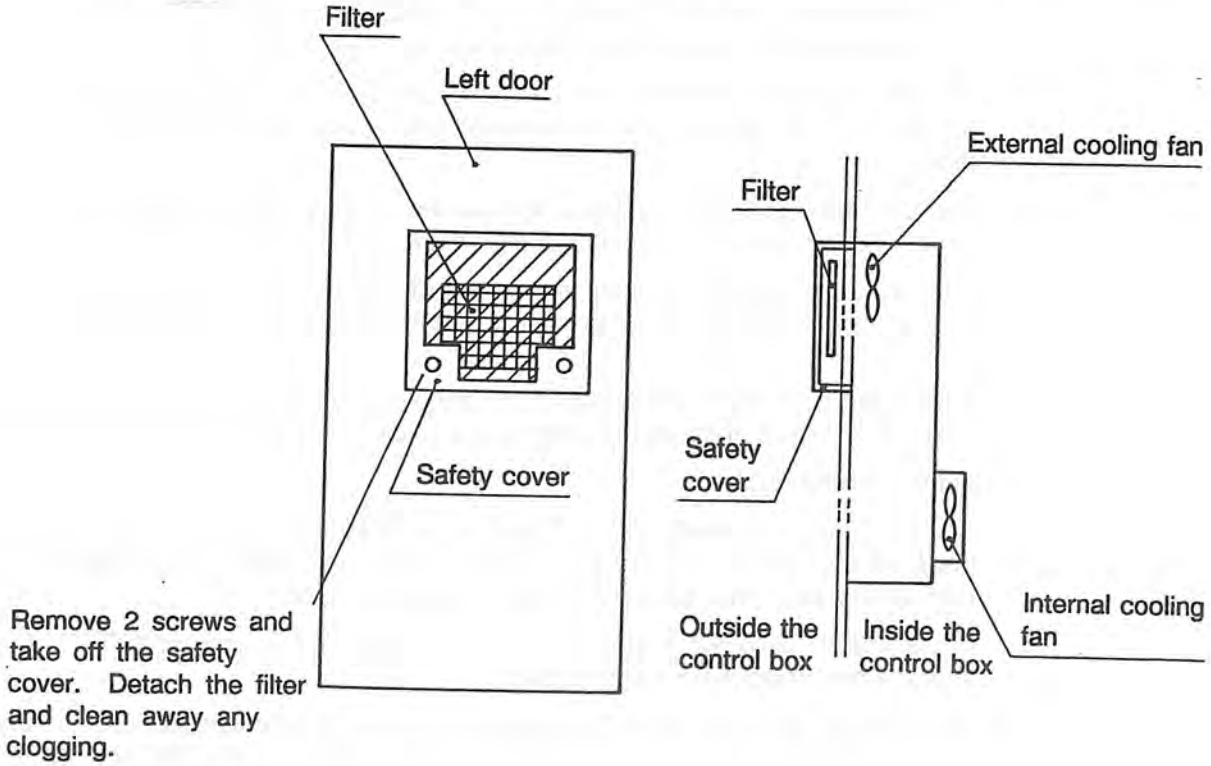

Fig. 2-4

3. Operation and Structure of the NC

To gain an overall understanding of CNC operations, study the following carefully.

3-1. Example of Operation

When G01 X100.000 Y100.000 F10 S1000 T10 M03 is given as command data, the unit operates as follows:

(1) Press the **CYCLE START** button, and the CPU starts running according to the command data registered in the memory.

(2) S, T and M operation starts.

- The S, T, M commands read are transferred to the ECP board, controlled by ECP processor, and transferred to the EC relay circuit and solenoid, etc. via the EC control unit. Of the M commands, those not resulting in machine operation are not transferred to the ECP board.
- The ECP processor selects the gear range according to the given S command, and drives the gear shifting solenoid via the EC control unit. It calculates the motor speed corresponding to the given S command and determines the rotation direction.

  The ECP board then converts the motor speed command into analog voltage and gives it as an output to the spindle drive VAC motor control unit, which drives the spindle drive VAC motor.
- The ECP processor gives a signal for selecting the toolpot according to the programmed T code. The control of magazine rotation is made by the machine control unit.
- Thus, the spindle starts to rotate in the forward direction at 1,000 rpm (min^{-1}) with the middle gear range selected. The magazine is rotated to select the #10 tool commanded by the code T10.
- After these S, T and M commands have been executed and the commanded states are obtained, the execution completion signals are given to the MAIN board from the ECP board.

(3) Operation of Interpolator

- The moment the operation by S, T and M commands is started, functions are generated at the feedrate of F10 mm/min from a present coordinate point to the commanded coordinate point (X100.000, Y100.000) along a G01 straight-line path.

  M commands have two kinds: WITH and AFTER, and in case of AFTER, it is carried out after the axis interpolation is completed.

  Also, in case the main spindle is equipped with the rotation interlock function, the interpolator does not start to operate before the main spindle rotates in G01, G02 and G03 modes.

(4) Movement of Axes

- OCON, the output from the interpolator, is compared with the actual position data RAPA given from the position encoder. The difference ODIF between OCON and RAPA is added to the commanded feedrate, and the result is outputted to the servo processor, where it is converted into the motor current value (digital value). This motor current value is then outputted to the servo drive.
- The servo drive unit controls the brushless servomotor so that the ODIF input will be zeroed at all times, and as a result, completes positioning to X100.000, Y100.000.

3-2. Description on Each Major NC Unit

(1) The power supply unit receives AC 200V supply and supplies all the power required for operation of the CPU. It also controls the sequence for power supply ON/OFF. Press the **POWER ON** button on the operation panel, and the power supply unit supplies first voltage to the CPU and drives the CPU. Press the **POWER OFF** button, and this unit cuts off voltage supply to the CPU after stopping CPU operation. Moreover, this unit detects abnormalities such as abnormal drop and rise of output voltage, abnormal drop of input voltage, and elevated temperature within the unit, etc., causes the CPU to stop the operation, cuts off voltage supply and has a monitor function to display the abnormality cause on the monitor display. The monitor display is effective even if supply voltage to the CPU is cut off by pressing the **POWER OFF** button on the operation panel, unless power supply to the CNC system is cut off by turning off the main switch (no-fuse circuit breaker).

(2) The CPU unit is the central controller of the OSP5020M/OSP500M-G and of the multi-processor structure consisting of plural processors.

The standard unit consists of BOARDs and CARDs annexed to the BOARDs as follows:

(a) MAIN BOARD-II B: Main Processor Board

This consists of an IC memory, bubble memory and main processor to control slave processor and each interface.

BUBBLE CARD: Bubble Memory

This is a memory to store taped commands, and control software when power is switched OFF. The operation of writing the control software into the bubble memory is called "loading". Such control software contained in floppy disks is provided to all the NC system.

When loading is carried out according to Section 3, 2. "Loading", if required, the contents of the bubble memory can be rewritten.

* The circuit interfacing the tape reader is also contained in the MAIN BOARD-II B.

(b) CRP BOARD-II C: CRT Processor Board

The circuit interfacing the CRT operation panel

This consists of the interface circuit for the CRT display and the interface circuit for the inputs/outputs of the machine operation panel.

(c) SVP BOARD-II D: Servo Processor Board

This board consists of the timing generation circuit, pulse handle, spindle pulse generator, servo drive unit, position encoder, inductosyn, and sensor input interface necessary to configure the servo processor.

A single board has the circuits for two axes. Therefore, the standard specification uses an SPC1 card additionally.

SVP CARD 1: Servo Processor Card

This card consists of the servo drive unit, position encoder, inductosyn, and sensor input interface for one axis. One SPC1 card is mounted on the SVP-II D board as standard.

(d) FDC BOARD-II (optional)

The circuit interfacing the floppy disk drive unit

(e) ECP BOARD-ⅡA

The processor for machine control such as ATC, APC, various kinds of solenoids and main spindle motor drive unit and the circuit interfacing position encoder for magazine rotation.

(3) The EC control unit is a unit consisting of the I/O unit (child station), the FN CARD (parent station), and the fiber optics.

The I/O unit controls the output to relay circuits, solenoids, etc. and the input from limit switches, relay contacts, and other switches.

The FN CARD is the interface with the ECP BOARD-Ⅱ.

The fiber optics serves to connect the I/O unit with the FN CARD.

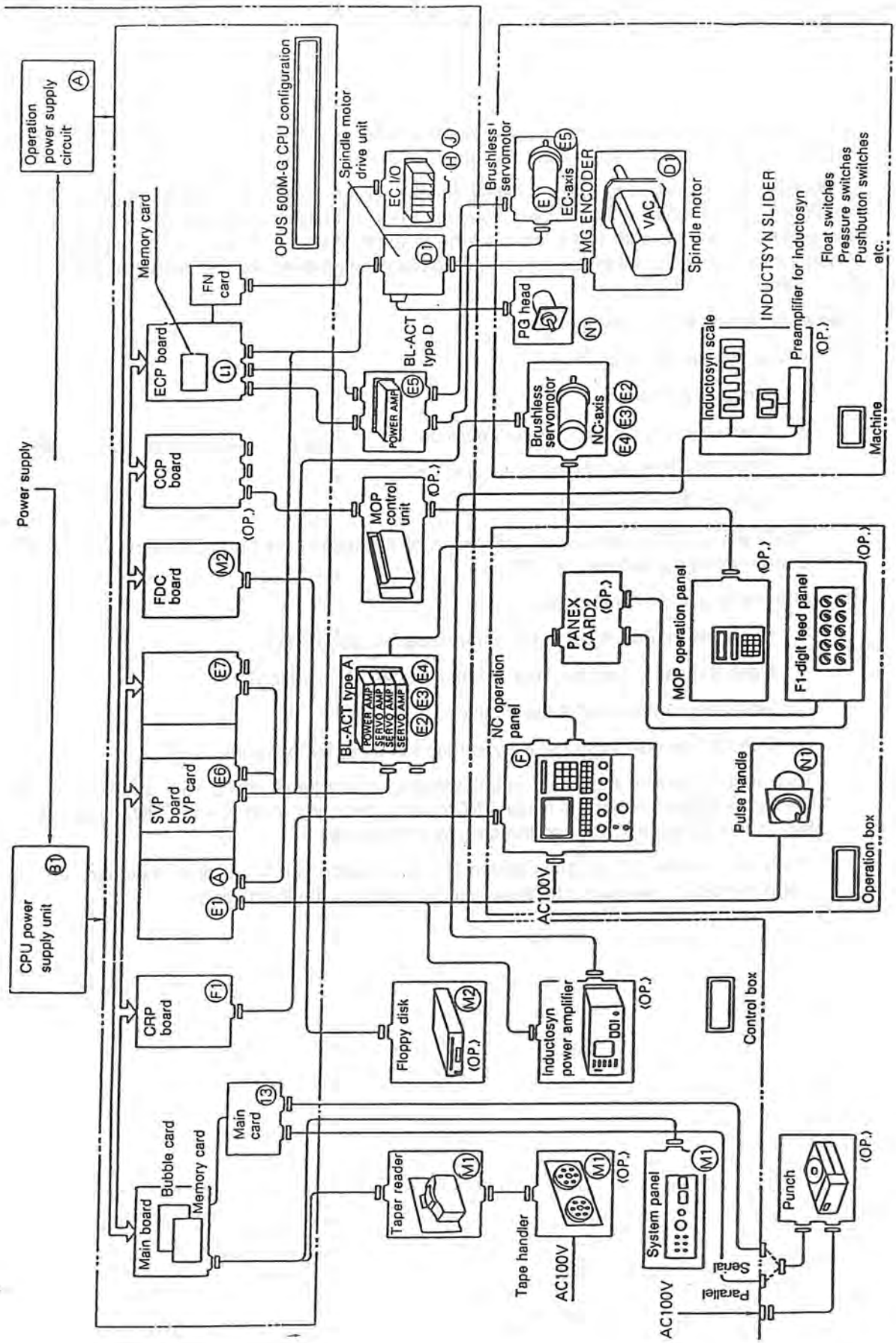

Fig. 2-5 OSP5020M/OSP500M-G System Configuration

SECTION 3 TROUBLE AND TROUBLESHOOTING

The purpose of this section is to minimize downtime of the machine through speedy detection and remedies of the cause of any trouble that might occur.

It is extremely important to make detailed checks on the condition of the machine and CNC system when the trouble arose and to carry out various kinds of tests described in this section. Thus, the customer himself will be able to fix the machine in most cases. The test results reported to your local Okuma representative will be a great help in determining the nature and extent of the trouble and the remedies to be applied.

Generally, check the following matters:

(1) When Trouble Occurs,

- Mode of operation
- Current position and command position
- What STATUS display lamp is going on?
- Is the ALARM lamp on?

When the ALARM lamp is on, the cause of the alarm can be known from the contents of the alarm message given on the CRT.

(2) After Resetting the CNC System,

- Does the trouble occur at the same situation repeatedly?
- Does the same trouble occur in other modes of operation?
- How about frequency of the trouble?
- Does the trouble arise regularly in terms of time, temperature, etc.?

This section covers the basic troubleshooting procedures, along with structure, operation and method of inspection for the major CNC component parts such as the CPU, servo drive units, relays in the EC control unit and the spindle control unit.

When any trouble occurs, see Section 2 "Maintenance and Inspection" together with this Section 3 and carry out necessary checks in accordance with the instructions.

1. Analysis of Trouble

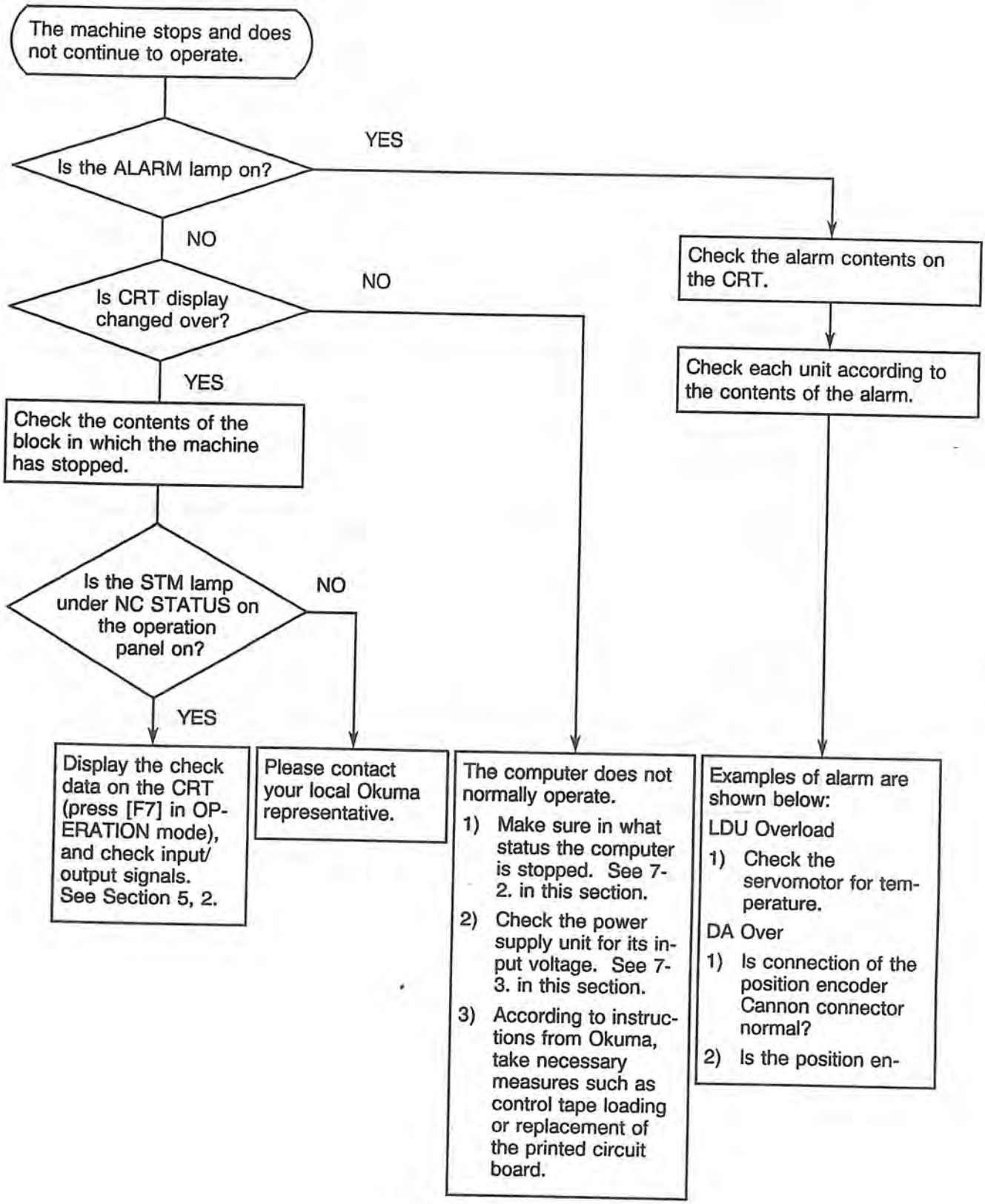

Fig. 3-1 Analysis of Trouble

2. Loading (For the Model Equipped with the Floppy Disk Drive)

Bubble memory stores control software such system software, NC control software and EC control software. When the bubble memory has been replaced or the control software is to be replaced with new one, loading of software to the bubble memory becomes necessary.

Control software of OSP5020M/OSP500M-G is delivered by floppy disks.

(1) Floppy Disks (3 floppy disks are delivered with the control.)

Floppy disk A1: 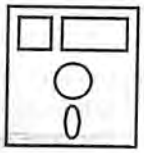	Basic control software for NC is stored in this floppy disk. When the program in this floppy disk is loaded, data having been stored in the bubble memory is cleared and replaced with new program.
Floppy disk A2: 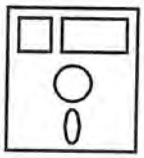	Basic control software for EC is stored in this floppy disk.
Floppy disk B: 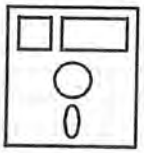	Used for storing machine data which has been changed after delivery.

Floppy Disk A1:

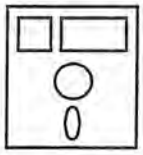

Control Software (File Name)	Classification
BIN**-***-*.BBM	Bubble memory initialization
NOS**-**-*.SYS	System software
MAA0*-**-*.POL	NC main software
MAG0*-**-*.POL	Graphic, PPC
MAS00-**-*.POL	NC specification code
MAM**-**-*.POL	NC message
MDU0*-**-*.PBU	Bubble memory backup (initial values) (Backup by the use of backup function key)
MAU0*-**-*.PBU	Bubble memory backup (initial values) (Backed up always)
MSU0*-**-*.PBU	Servo data
M*Z**-**-****.POL	Software specific to individual users
MAQ**-**-*.MSB	Maker subprograms (used for automating functions, etc.)

May or may not be supplied depending on specifications.

* in file name varies depending on software version and machine model.

Floppy Disk A2:

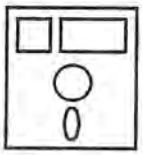

Control Software (File Name)	Classification
MEA0*-**-*.POL	EC main software
MES00-**-*.POL	EC specification code
MEM**-**-*.POL	EC message
MEU0*-**-*.MPB	Backup of EC processor backup area (initial values)
MEZ**-**-****.POL	Software specific to individual users

May or may not be supplied depending on specifications.

* in file name varies depending on software version and machine model.

Floppy Disk B:

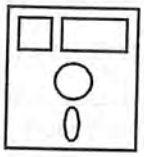

Control Software (File Name)	Classification
MDU0*-**-*.PBU	Bubble memory backup (Backup by the use of backup function key)
MAU0*-**-*.PBU	Bubble memory backup (Backed up always)
MEU0*-**-*.MPB	Backup of EC processor backup area

* in file name varies depending on software version and machine model.

Files in the floppy disk B stores the backup of the machine data (usually the data at machine delivery).

(2) Control Software Loading Procedure

Open the door of the control box at the bottom of the CRT operation panel and find the panel shown below in the control box.

Load the control software from the floppy disks A1, A2 and B in this order.

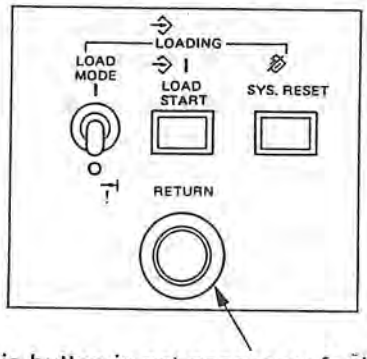

This button is not necessary for loading

(a) Turn on the **LOAD MODE** switch.

(b) Push the **SYSTEM RESET** button.

The CRT will display the following message.

Control floppy loading wait

(c) Set floppy disk A1 in the disk drive.

For the procedure to set disk A1 in FDD, refer to "Floppy Disk Handling" in Section 2, 2.

(d) Press the **LOAD START** button.

The CRT indicates the message below:

Control floppy loading start

The loading starts and the file name being loaded will be displayed on the CRT and all files in the floppy disk will be loaded in the bubble memory.

After the completion of the loading, the CRT will display the messages indicated below:

Control floppy loading end
Control floppy loading wait

(e) Remove floppy disk A1 from the disk drive and place floppy disk A2 instead.

(f) Press the **LOAD START** button.

All files in floppy disk A2 will be loaded in the bubble memory in the same manner as in step d). If the bubble memory has the file of the same file name to be loaded, the old file is replaced with the new file.

(g) Remove floppy disk A2 from the disk drive and place floppy disk B instead.

(h) Press the **LOAD START** button.

Note: *Loading from floppy disk B will initialize the machine data (the data at machine delivery).*

(i) Remove floppy disk B from the disk drive after the completion of loading.

(j) Turn off the **LOAD MODE** switch.

(k) Turn off power supply and then turn it back on.

The CPU will start running in several tens seconds.

Note: *Contact always your local Okuma representative when the loading is necessary.*

3. Machine-Mounted Electricals

Mounted on the machine are limit switches, solenoids, motors and other electro-mechanical components. See the layout diagrams of machine-mounted electricals in Section 7 for their location. As these machine-mounted electricals are placed in a very severe environment affected by chips, coolant, oil, dirt and dust, careful consideration has been given in design to protect these components from excessive moisture, dirt and dust. Nevertheless, electrical trouble causes a high rate of the NC troubles.

However, most of the electricals are relatively simple in their operation and can be easily checked and repaired if required by the customer's maintenance technicians. The checking procedures given under Section 3, 9. "Relays and Magnet Switch Circuits" should be also consulted for solving electrical problems.

This Section describes the practical method to inspect limit switches and solenoids. For other machine-mounted electricals, check in a similar way.

3-1. Inspection of Limit Switches by Multimeter

Limit switches are used for detecting travel end of individual axes, and on the ATC, APC and spindle drive gear box, etc.

The procedure to check travel end limit switches for their operation is given below as an example.

See the lamps under L. S. EMERGENCY on the check panel. Supposing that lamp X is lighted and the X-axis is not at the travel end position, the limit switch will be probably defective.

Next, turn the main switch on the EC control box OFF and remove the travel end limit switch for the X-axis.

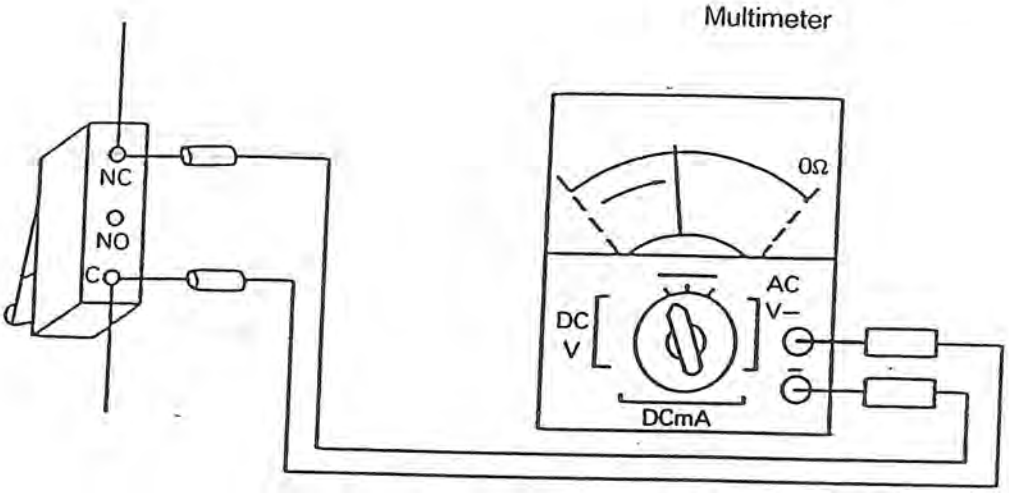

Fig. 3-2 LS Check with Tester

(1) Disconnect the two electric wires connected to the limit switch.

(2) Set the multimeter to the resistance range.

(3) Apply multimeter probes to the limit switch terminals (C) and (NC).

(4) When the multimeter indicator deflects fully to the right on its scale, there is no problem with the limit switch. After that, press the limit switch actuating lever to check to be sure that the multimeter indicator does not move at all. Then, the limit switch can be judged to be good.

When the multimeter probes are applied to the limit switch terminals (C) and (NO), the multimeter indicator moves in the reverse direction. Namely, when the limit switch actuating lever is not pressed, the multimeter indicator does not move, but when pressed, the multimeter indicator will deflect to the right.

3-2. Inspection of Limit Switch by NC Check Data Display

A limit switch is mounted to check that the tool in spindle is unclamped. When this limit switch fails to function, an alarm is given because the tool in spindle unclamp state is not confirmed. Though this limit switch can be checked with a multimeter, this section describes a method to check it by the check display function.

The procedure is as follows:

(1) Display the check data *MACHINE INPUT* display screen on the CRT, as follows:

```
AUTO OPERATION                                   N        0

CHECK DATA          *MACHINE INPUT*        PAGE  13    1mm

   NO.    data        bit7 bit6 bit5 bit4 bit3 bit2 bit1 bit0
    1   00000000=00   MGAC OKM/      OLM/ OL4/ OLZ/ OLY/ OLX/
    2   00000000=00   MGCC MGCW MMIT PUT/ THPO STEN AXE/ ESP/
    3   00000000=00   EMAW MGIR DCLS DOPN DIRS DILE CPCC CPCW
    4   00000000=00   4AUC 4ACL 4AON CIPN WKSW OLHM COLM LUBM
    5   10000000=80   OSUC OSCL FDOP FDCL      CRCN LBPD LBPR
    6   00000000=00   TPBA PBTU PBTC PBTY STNE STEC ISUC ISCL
    7   10000000=80   CLV/      MGDC MGNT ATDO ATDC RTCB RTCF
    8   00000000=00                                RUTG RUTR
    9   00000000=00
   10   00000000=00
   11   00000000=00
   12   00000100=04

=
PROGRAM | ACTUAL | PART | BLOCK |        |        | CHECK |
 SELECT | POSIT. | PROGRAM | DATA | SEARCH | ATC/APC | DATA | [EXTEND]

 F1  F2  F3  F4  F5  F6  F7  F8
```

(2) See the bit 6 data on check No. 0.

(a) When (NO) and (C) are wired:

When the limit switch is tripped, it displays "1" if the limit switch is normal. When it is not pressed, the bit data is "0".

(b) When (NC) and (C) are wired:

"0" when the limit switch is tripped.
"1" when the limit switch is not tripped.

3-3. Inspection of Solenoid by NC Check Data Display

Solenoid valves are used to unclamp the tool in spindle.

When a solenoid is defective, the tool in spindle cannot be unclamped. Whether the solenoid is operating or not cannot be known unless voltage is applied and checked with a multimeter. However, since checking a signal for solenoid operation which is given from the CNC will be easily performed, the procedure for checking the status of this signal is explained below.

(1) Display the check data *MACHINE OUTPUT* display screen on the CRT as follows:

```
AUTO OPERATION                                   N        0

CHECK DATA          *MACHINE OUTPUT*       PAGE  15    1mm

     NO.    data        bit7 bit6 bit5 bit4 bit3 bit2 bit1 bit0
      1   00001011=0B   BUZZ ALML WRKL LIHT SPUT PWOF VACF LDON
      2   00000000=00   MDIL      CPCC CPCW WKSW OHLM COLM LUBM
      3   00000000=00   MGON MGAR STUC STCL TCCY MMIT OPIL CIPN
      4   00000000=00   EXM8 EXM7 EXM6 EXM5 EXM4 EXM3 EXM2 EXM1
      5   00000001=01        MIST ARNS AIRB ISUC OSUC      ZUBR
      6   00000001=01        4ACL ADRO ADRC TSAB DROP RTCB RTCF
      7   00000010=02                                RUTC RUTR
      8   00000000=00
      9   00000000=00
     10   00000000=00
     11   00000000=00
     12   00000000=00

*
PROGRAM | ACTUAL | PART | BLOCK |        |       | CHECK |
 SELECT | POSIT. | PROGRAM | DATA | SEARCH | ATC/APC | DATA | [EXTEND]

 F1     F2     F3     F4     F5     F6     F7     F8
```

(2) When bit 3 of check No. 5 is "1", it indicates that the tool in spindle unclamp signal is active. With "0" display, the tool in spindle will not be unclamped.

4. Brushless Servomotor Drive Unit

4-1. BDU-A Series

Brushless servomotors are employed to control movement of each axis of X, Y, and Z at the feedrate and in the direction as commanded by the CNC. It is the brushless servo drive unit that accurately controls the rotating speed.

As described in "Operation and Structure of the NC" in Section 2, 3., OCON, the output from the CPU interpolator is compared with RAPA, the output from the position encoder which detects the actual position of each axis. The difference ODIF between OCON and RAPA is added to the commanded feedrate and the result, DA is obtained. The brushless servo unit functions to control the brushless motor, i.e., the present position of each axis so that the ODIF is always zero.

The brushless servomotor drive unit BDU-A has been developed by Okuma as the drive unit for the brushless servomotor especially for axis drive of machine tools. The brushless servomotor is also the product of Okuma, the supplier of mechatronics technology. The features of the BDU-A are as follows:

(1) The use of a brushless servomotor does not require inspection and replacement of commutator brushes, which is the must with DC motors.

(2) The transistor PWM system assures smooth and quick response.

(3) It promises good acceleration/deceleration characteristics.

(4) The high-resolution OSP position encoder directly coupled to the motor detects both the motor speed and position. Therefore, control and construction are quite simple.

(5) Various measures to protect the motor are provided.

They include:

- motor overload detection
- no-fuse breaker
- overcurrent alarm
- input voltage detection
- circuit failure

4-1-1. Configuration of BDU-A

(1) General System Configuration

The BDU-A consists of the DC power supply and the servo amplifier unit. A DC power supply can supply power to multiple servo amplifiers (max. six axes) and one brushless servomotor requires one servo amplifier. Fig. 3-3 shows the configuration of the BDU-A in the six-axis control CNC.

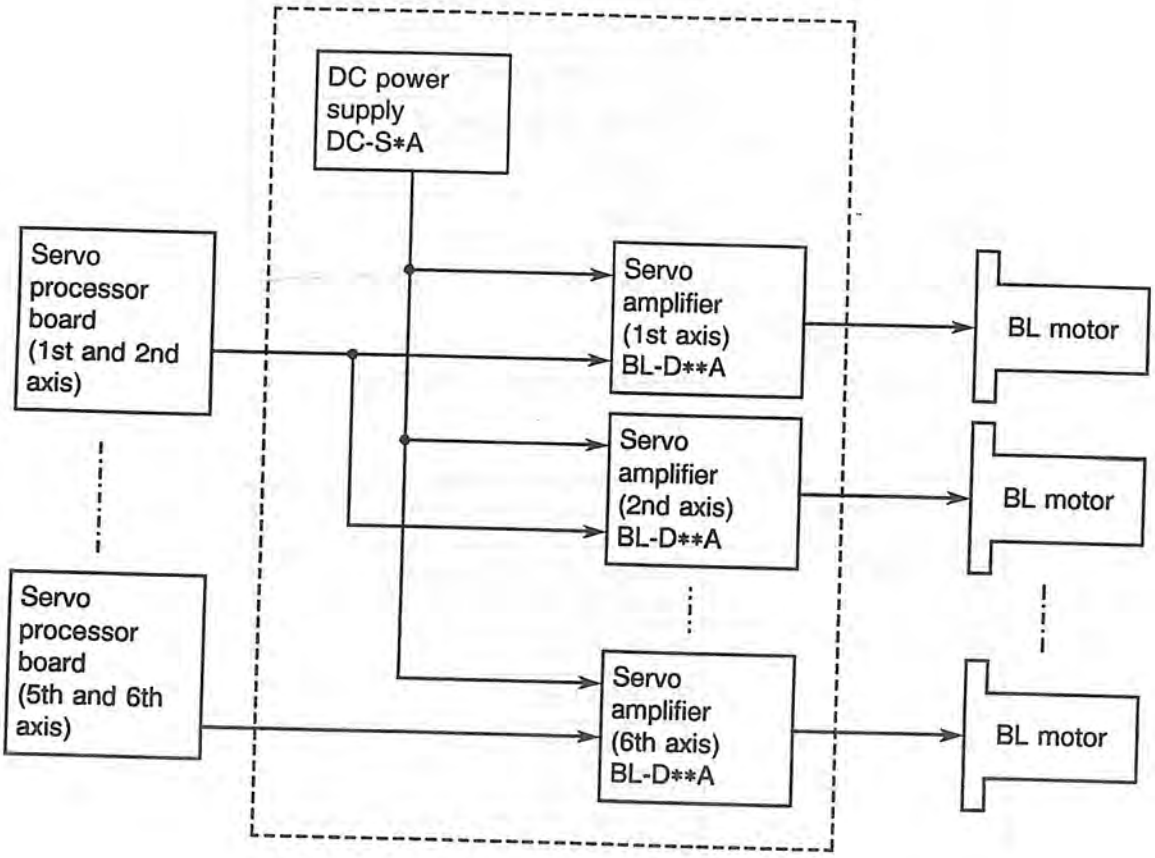

Fig. 3-3 BDU-A Configuration

(2) Configuration of DC Power Supply Unit

The DC power supply unit consists of the DC-PS board and the DC-S*A unit.

Table 3-1

Name	Model (Description)
DC-PS Board	PCB for two-axis control
	PCB for three-axis control
	PCB for four-axis control
	PCB for five-axis control
	PCB for six-axis control
DC-S*A Unit	DC-S1A†
	DC-S3A

† Conventional DC-S2 unit is replaced with the DC-S1A unit after the slight change in models.

(3) Configuration of Servo Amplifier

The servo amplifier consists of the SVC-A board and the BL-D**A unit.

Table 3-2

Name	Model (Description)
SVC-A Board	Change DIP switch setting according to motor model.
BL-D**A Unit	BL-D15A unit
	BL-D30A unit
	BL-D50A unit
	BL-D75A unit
	BL-D150A unit

(4) Construction of DC Power Supply, DC-PS Board and DC-S*A Unit

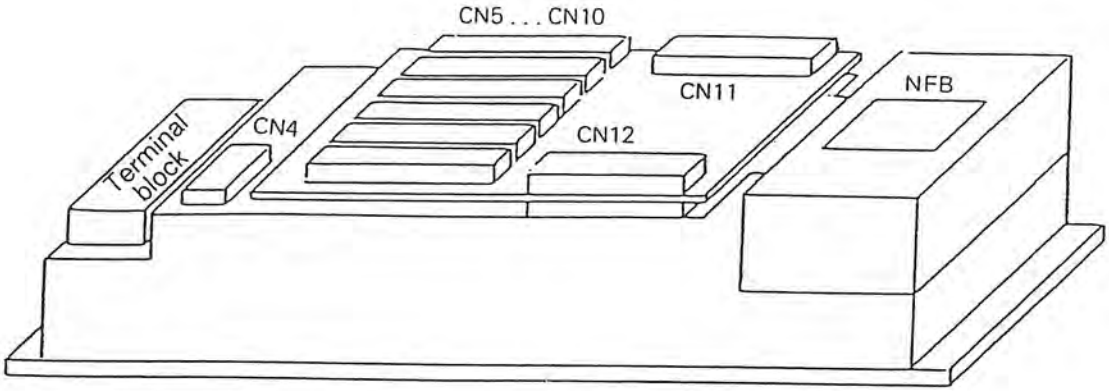

Fig. 3-4 Construction of the DC Power Supply

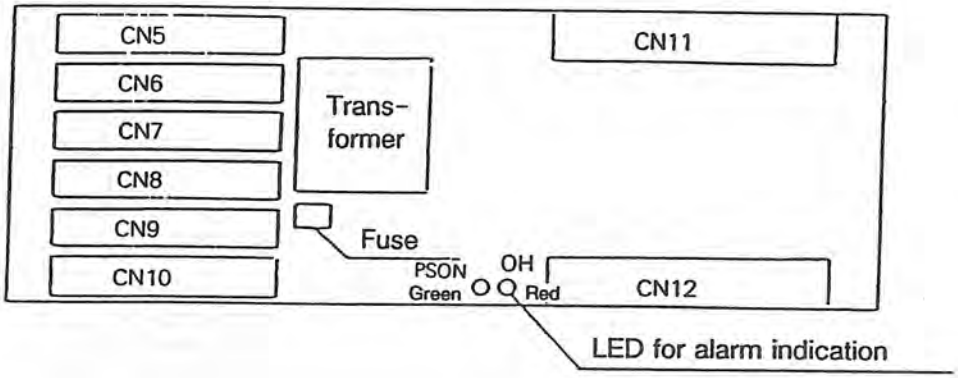

Fig. 3-5 Arrangement of Major Component Parts of DC-PS Board

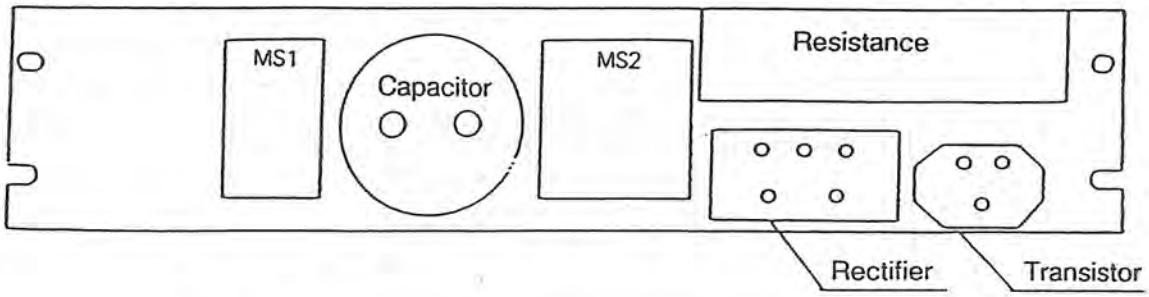

Fig. 3-6 Arrangement of Major Component Parts of DC-S*A Unit

(5) Construction and Component Part Arrangement of Servo Amplifier

Servo Amplifier, SVC-A Board and BL-D**A Unit

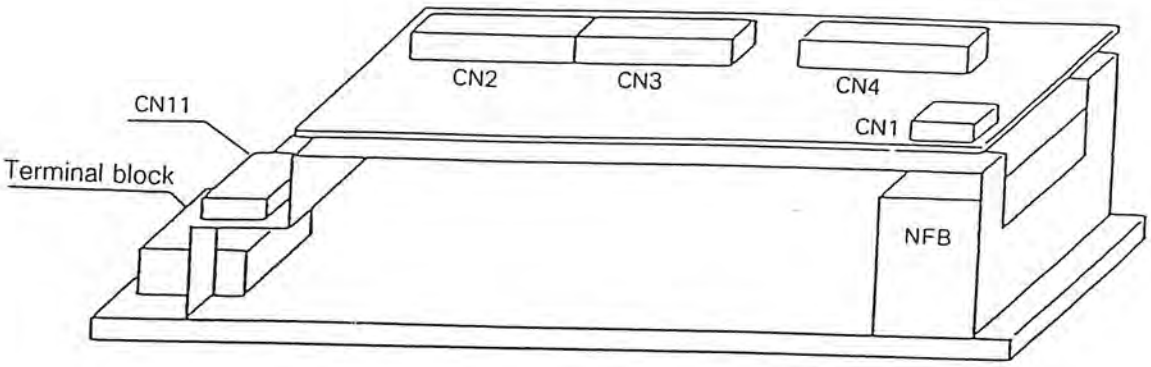

Fig. 3-7 Construction of the Servo Amplifier

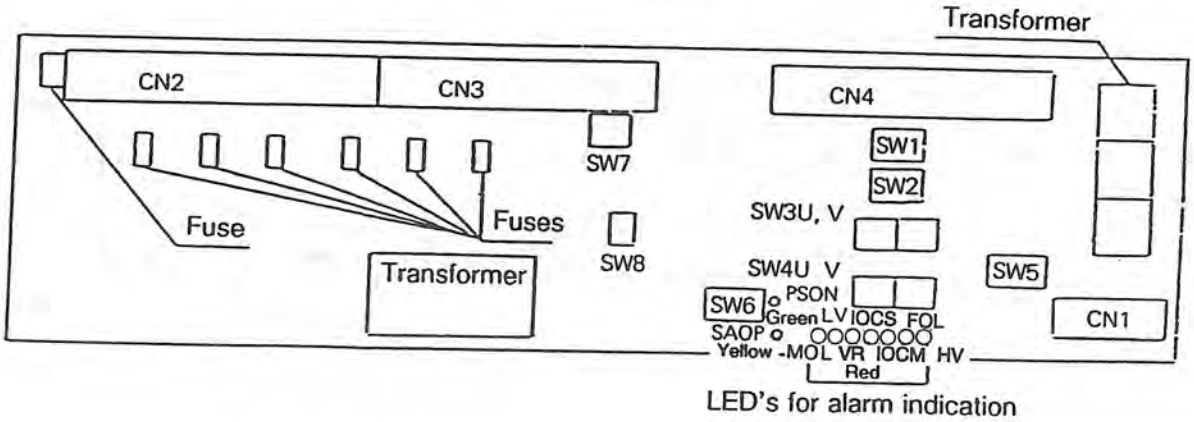

Fig. 3-8 Arrangement of Major Component Parts of SVC-A Board

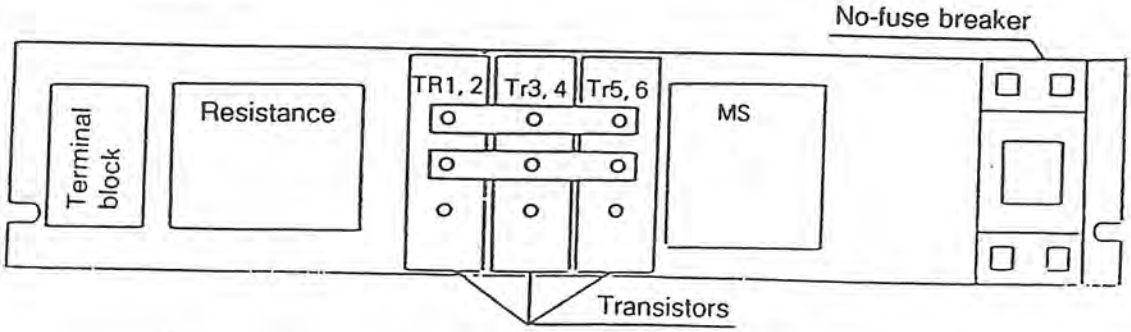

Fig. 3-9 Arrangement of Major Component Parts of BL-D**A Unit

4-1-2. Protection and Alarm Monitoring Function (BL-D**A Series)

	Functions	Purposes and Contents
1	Grounding Protection	For grounding problem of the servo amplifier or motor, a high speed no-fuse breaker is tripped to shut off the power immediately. At this time, the motor stops safely with dynamic brake applied.
2	Base Circuit Protection	After a breakdown of a power transistor, the fuse connected in the base line protects the base circuit from over voltage.
3	Motor Overload Protection (MOL)	A thermostat in the motor armature winding detects overload state of the motor. When an overload is detected, the motor stops safely using dynamic brake.
4	Abnormal Temperature Rise of Heat Sink (FOL)	If the heat sink temperature rises abnormally due to heat generation loss caused by deteriorated cooling condition and main circuit elements, this overheat state is detected. When an overheat is detected, motor stops safely using dynamic brake.
5	High/Low Voltage (HV/LV)	DC power supply output voltage is monitored to protect the main circuit elements from breakdown or irregular motor operation caused by abnormally high or low DC voltage. When an alarm is detected, the motor stops safely using dynamic brake.
6	DC Power Supply Short (IOC-S)	An overcurrent caused by the short in the inverter DC power supply due to failure of the main circuit elements or control circuit is detected to protect the main circuit elements from secondary breakdown. When an alarm is detected, the motor stops safely using dynamic brake.
7	Instantaneous Motor Overcurrent (IOC-M)	Instantaneous overcurrent in the motor circuit exceeding the preset level is detected to protect motor magnet from demagnetization. When an alarm is detected, the motor stops safely using dynamic brake.
8	Control Circuit Power Supply Alarm (VR-LOSS)	Voltage in the control circuit is detected if the voltage exceeds the value to guarantee safe motor operation to prevent irregular motor operation. When an alarm is detected, the motor stops safely using dynamic brake.
9	Regenerative Resistor Overheat (OH)	Overheating of the regenerative resistor is detected if current directly flows it due to a problem of the regeneration control circuit to protect it from burning down. When an alarm is detected, the motor stops safely using dynamic brake.

4-1-3. Trouble and Troubleshooting

The troubleshooting procedure is explained below.

(1) DC Power Supply Unit

No.	Trouble	Causes	Check	Measures
1	No-fuse breaker is tripped.	Incorrect wiring at terminals (VⅡ, VL)	Check wiring.	Correct wiring.
		Grounding of output terminal (VⅡ, VL) cables	Check the wiring for grounding.	Replace the cable.
		Grounding of the servo amplifier	Check the servo amplifier for grounding.	Replace the servo amplifier.
		Defective DC power supply	Check that the above indicated items are all correct.	Replace the DC power supply.
2	LED "OH" lights.	Defective discharge power transistor	Check the power transistor.	Replace the DC power supply.
		Loose connection of connector CN12	Check the connection of the connector CN12.	Connect the connector CN12 correctly.
		Defective DC power supply	Check that the above indicated items are all correct.	Replace the DC power supply.
3	The "DC PWR ON" LED is not turned off even after the power is turned off.	Defective DC power supply	--	Replace the DC power supply. (Before attempting replacement, confirm that the red DC PWR ON LED is off.)

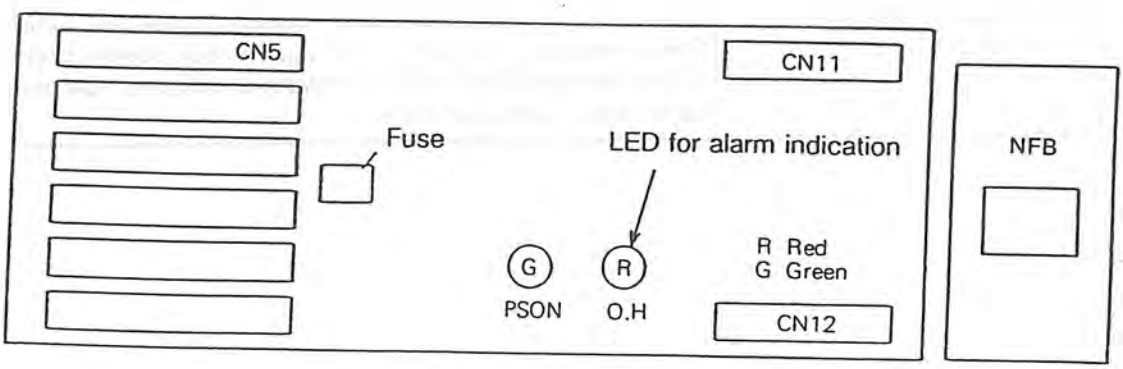

Fig. 3-10

(2) Servo Amplifier

No.	Trouble	Causes	Check	Measures
4	No-fuse breaker is tripped.	Incorrect wiring at terminals (U, V, W, E)	Check wiring.	Correct wiring.
		Grounding of output terminal (U, V, W, E) cables	Check the wiring for grounding.	Replace the cable.
		Defective power transistor	Check the power transistor.	Replace the servo amplifier.
		Defective servo amplifier	Check that the above indicated items are all correct.	Replace the servo amplifier.
5	LED "PS-ON" does not light.	Fuse (HM3.2) is blown.	Check if the fuse is blown.	Replace the fuse.
		Loose connection of connector CN10	Check the connection of the connector CN10.	Connect the connector CN10 correctly.
		Loose connection of connector CN2	Check the connection of the connector CN2.	Connect the connector CN2 correctly.
		Defective servo amplifier	Check that the above indicated items are all correct.	Replace the servo amplifier.
6	LED "LV" lights.	The no-fuse breaker for the servo amplifier or the DC power supply is OFF.	Check the no-fuse breaker position.	Turn ON the no-fuse breaker.
		3-phase input voltage is abnormally low.	Check the input 3-phase power with a multimeter.	Check the power capacity.
		One phase is lost in the 3-phase input power.	Check the input 3-phase power with a multimeter.	Check the power supply cable.
		Loose connection of connector CN3	Check the connection of the connector CN3.	Connect the connector CN3 correctly.
		Defective servo amplifier	Check that the above indicated items are all correct.	Replace the servo amplifier.
		Defective DC power supply	Check that the above indicated items are all correct.	Replace the DC power supply.
7	LED "VR" lights.	Defective SVC-A board	--	Replace the SVC-A board.

No.	Trouble	Causes	Check	Measures
8	LED "IOCS"	Incorrect setting of SW7	Confirm that SW7 setting is as specified in the Servo Characteristic Chart.	Re-set SW7 according to the Servo Characteristic Chart.
		Incorrect wiring at terminals (U, V, W, E)	Check wiring.	Correct wiring.
		Grounding of output terminal (U, V, W, E) cables	Check the wiring for grounding.	Replace the cable.
		Defective power transistor	Check the power transistor.	Replace the servo amplifier.
		Defective servo amplifier	Check that the above indicated items are all correct.	Replace the servo amplifier.
9	LED "IOCM" lights.	Incorrect setting of SW1 and SW2	Confirm that SW1 and SW2 settings are as specified in the Servo Characteristic Chart.	Re-set SW1 and SW2 according to the Servo Characteristic Chart.
		Incorrect wiring at terminals (U, V, W, E)	Check wiring.	Correct wiring.
		Grounding of output terminal (U, V, W, E) cables	Check the wiring for grounding.	Replace the cable.
		Loose connection of connector CN1	Check the connection of the connector CN1.	Connect the connector CN1 correctly.
		Defective SVP board	Check that the above indicated items are all correct.	Replace the SVP board.
		Defective servo amplifier	Check that the above indicated items are all correct.	Replace the servo amplifier.
		Defective motor	Check that the above indicated items are all correct.	Replace the motor.
10	LED "FOL" lights.	Overload operation	Check load with the load meter.	Review the cutting conditions and cutting tool.
		Loose connection of connector CN4	Check the connection of the connector CN4.	Connect the connector CN4 correctly.
		Defective servo amplifier	Check that the above indicated items are all correct.	Replace the servo amplifier.

No.	Trouble	Causes	Check	Measures
11	LED "HV" lights.	3-phase input voltage is abnormally high.	Check the input 3-phase power with a multimeter.	Check the power capacity.
		Defective power transistor of DC power supply	Check the power transistor.	Replace the DC power supply.
		Defective DC power supply	Check that the above indicated items are all correct.	Replace the DC power supply.
		Defective servo amplifier	Check that the above indicated items are all correct.	Replace the servo amplifier.
12	LED "MOL" lights.	Overload operation	Check load with the load meter.	Review the cutting conditions and cutting tool.
		Loose connection of connector CN11	Check the connection of the connector CN11.	Connect the connector CN11 correctly.
		Loose connection of connector CN4	Check the connection of the connector CN4.	Connect the connector CN4 correctly.
		Defective servo amplifier	Check that the above indicated items are all correct.	Replace the servo amplifier.

(3) Others

No.	Trouble	Causes	Check	Measures
13	DIFF OVER error occurs.	Incorrect setting of SW1 and SW2	Confirm that SW1 and SW2 settings are as specified in the Servo Characteristic Chart.	Re-set SW1 and SW2 according to the Servo Characteristic Chart.
		Incorrect wiring at terminals (U, V, W, E)	Check wiring.	Correct wiring.
		Loose connection of connector CN1	Check the connection of the connector CN1.	Connect the connector CN1 correctly.
		Defective power transistor	Check the power transistor.	Replace the servo amplifier.
		Defective servo amplifier	Check that the above indicated items are all correct.	Replace the servo amplifier.
		Defective motor	Check that the above indicated items are all correct.	Replace the motor.
14	Motor hunts.	Loose connection of connector CN1	Check the connection of the connector CN1.	Connect the connector CN1 correctly.
		Incorrect wiring at terminals (U, V, W, E)	Check wiring.	Correct wiring.
		Defective power transistor	Check the power transistor.	Replace the servo amplifier.
		Defective servo amplifier	Check that the above indicated items are all correct.	Replace the servo amplifier.
		Defective SVP board or TB board	Check that the above indicated items are all correct.	Replace the SVP board or TB board.
		Defective encoder	Check that the above indicated items are all correct.	Replace the encoder.
		Defective motor	Check that the above indicated items are all correct.	Replace the motor.

(4) Checking Power Transistor

Procedure:

1) Remove the SVC-A board.
2) Disconnect the leads and bus bar for the power transistor to be checked.
3) Measure the resistance between terminals using a multimeter. Correct resistance is as indicated in Table 3-3.

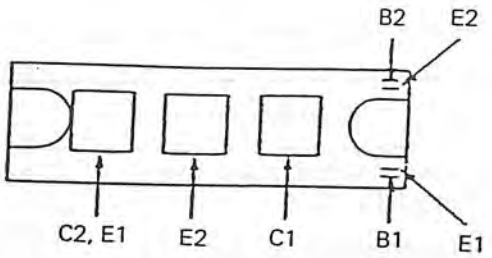

Fig. 3-11 Transistor Module Terminal Arrangement

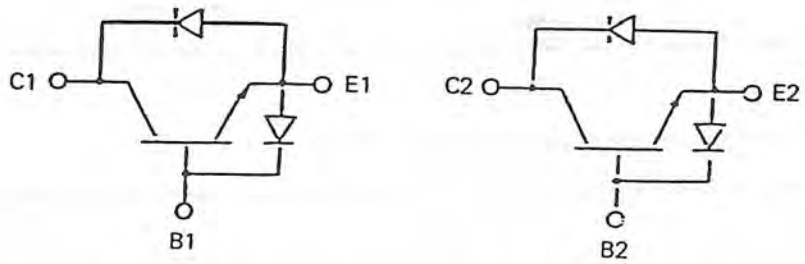

Fig. 3-12 Equivalent Circuit for Transistor Module

Table 3-3 Judgment Standard (Multi-meter setting: ×10)

Transistor Terminals		Correct	Abnormal
Multimeter (+) probe	Multimeter (−) probe		
C1 (C2)	E1 (E2)	Tens to hundreds of ohms	0 Ω, ∞
E1 (E2)	C1 (C2)	∞	0 to hundreds of ohms
C1 (C2)	B1 (B2)	Tens to hundreds of ohms	0 Ω, ∞
B1 (B2)	C1 (C2)	∞	0 to hundreds of ohms
B1 (B2)	E1 (E2)	Hundreds of ohms	0 Ω, ∞
E1 (E2)	B1 (B2)	Hundreds of ohms	0 Ω, ∞

4-2. BDU-D Series Servo Drive Unit

The brushless motor servo drive unit (Type D) is used for the control of the tool magazine and APC arm automatic positioning. (optional)

4-2-1. Protection Functions

The BDU-D series servo drive unit has the following protection functions.

(1) DC-PS (DC Power Supply) Unit

(a) Protection function using protection components

Type	Indication	Contents
No-fuse breaker	The no-fuse breaker lever is tripped to OFF. Light emitting diodes (LED), "PH", "LV" and "OVER DIS", light at the same time.	Protects the circuits from abnormal current flow caused by grounding of DC output line or short of output load.
Fuse	Fuse element is blown. When a fuse is blown, LED "PH" lights.	The fuse is blown when secondary side voltage of the control transformer is abnormal.

(b) Protection function using circuits in PCB

Type	Indication	Contents
Phase-loss alarm	LED "PH" lights.	When any one of three input phases of AC power supply is lost, the protection function is activated and motor rotation is stopped with dynamic brake applied.
Low-voltage alarm	LED "LV" lights.	The protection function is activated when DC output voltage is lowered below 200 V and motor rotation is stopped with dynamic brake applied.
High-voltage alarm	LED "HV" lights.	The protection function is activated when DC output voltage is increased exceeding 430 V and motor rotation is stopped with dynamic brake applied.
Over-discharge alarm	LED "OVER DIS" lights.	The protection function is activated when discharge transistor (TR5) is turned on for longer than the specified period and motor rotation is stopped with dynamic brake applied.

(2) Servo Amplifier Unit

(a) Protection function using protection components

Type	Indication	Contents
No-fuse breaker	1) No-fuse breaker lever is tripped to OFF. 2) LED "LV" lights. (SVC No. 2 board)	Protects the circuits from abnormal current caused by grounding of unit output line or short of loads. Protects the circuits from short of transistor bridge.
Fuse (control transformer primary input side)	1) Fuse element is blown. 2) When a fuse is blown, LED "PH" lights.	The fuse is blown when secondary side voltage of the control transformer is abnormal.
Fuse (secondary side of base circuit)	The base circuit protection fuse is blown.	Protects the base circuit from high voltage if power transistor is faulty.

(b) Protection function using circuits in PCB

Type	Indication	Contents
Phase-loss alarm	LED "PH" lights. (SVC No. 2 board)	When any one of three input phases of AC power supply is lost, the protection function is activated and motor rotation is stopped with dynamic brake applied.
Low-voltage alarm	LED "LV" lights. (SVC No. 2 board)	The protection function is activated when DC input voltage is lowered below 200 V and motor rotation is stopped with dynamic brake applied.
Motor overcurrent alarm	LED "IOC-M" lights. (SVC No. 2 board)	The protection function is activated when overcurrent (more than 120% of current limit value) flows to generate an alarm and motor rotation is stopped with dynamic brake applied.
Inverter short alarm	LED "IOC-S" lights. (SVC No. 2 board)	The protection function is activated when overcurrent (more than 125% of transistor rating) flows the transistor bridge to generate an alarm and motor rotation is stopped with dynamic brake applied.
High-voltage alarm	LED "HV" lights. (SVC No. 2 board)	The protection function is activated when DC input voltage is increased exceeding 430 V and motor rotation is stopped with dynamic brake applied.
PCB control power supply alarm	LED "VR" lights.	The protection function is activated when ±12 V power supply of the control circuit lowers below ±10.8 V to generate an alarm and motor rotation is stopped with dynamic brake applied.

Type	Indication	Contents
Encoder pattern data alarm	LED "E8" lights. (SVC No. 1 board)	This alarm is detected when data format of upper digit data sent from the motor incorporated encoder is abnormal. An alarm is generated and motor rotation is stopped with dynamic brake applied. (Equivalent to SVP pattern data alarm)
Encoder velocity alarm	LED "MPR" lights. (SVC No. 1 board)	This alarm is detected when lower digit numerical values sent from the motor incorporated encoder abnormally change. An alarm is generated and motor rotation is stopped with dynamic brake applied.
Encoder check data alarm	LED "APA" lights. (SVC No. 1 board)	This alarm is detected when upper digit numerical value read from the motor incorporated encoder does not conform to the numerical value obtained through the calculation of lower digit numerical value. An alarm is generated and motor rotation is stopped with dynamic brake applied. (Equivalent to SVP APA check data alarm)
Encoder alarm	LED "ALA" lights. (SVC No. 1 board)	This LED is turned on when any of the encoder alarm indicated above is detected.

Note: *An encoder alarm will be displayed until an alarm reset pulse is input from the ECPⅡ board after power supply is turned on. This alarm display does not indicate actual occurrence of an alarm and may be ignored.*

4-2-2. Trouble and Troubleshooting

If any problem occurs, locate the cause of the problem referring to the inspection items indicated below.

(1) DC-PS (DC Power Supply) Unit

No.	Problem	What to Check	Measures to Take
1	No-fuse breaker is tripped.	Connection at output terminals (VH, VL) for short, grounding and wrong connection	Correct wiring.
		Rectifier (REC)	Replace defective rectifier.
2	Fuse is blown.	Pin Nos. 1, 2 and 3 of output connectors (CN5, 6, 7, 8, 9 and 10)	Correct wiring.
		Wrong fuse	Replace fuse.
3	LED "PH" lights up. (Phase-loss alarm)	No-fuse breaker	Refer to No. 1.
		Phase-loss of 3-phase input power supply 1) If any one of three phases is lost, LED "PH" lights up. 2) If two phases are lost, neither of LED lights up because power is not supplied to control PCB.	Check 3-phase input power supply using a multimeter.
		Circuit breaker on control box	If circuit breaker tripped to OFF is reset to ON too quickly, LED "PH" might light up. Turn OFF the control box circuit breaker again then turn it back ON more than five seconds later.
		Connection of connector CN12	Check the connector.
		Malfunction of circuits on PCB	Replace the PCB.
4	LED "LV" lights up. (Low-voltage alarm)	Abnormally low voltage of 3-phase input power supply	Check input voltage with a multimeter.
		Phase-loss of 3-phase input power supply	Check input voltage with a multimeter.
		Connection of connector CN12	Check the connector.
		Malfunction of circuits on PCB	Replace the PCB.
5	LED "HV" lights up. (High-voltage alarm)	Wire broken in resistor RS2	Replace defective resistor.
		Transistor (TR)	Replace defective transistor.
		Connection of connector CN12	Check the connector.
		Malfunction of circuits on PCB	Replace the PCB.
6	LED "OVER DIS" lights up. (Over-discharge alarm)	Wire broken in resistor RS1	Replace defective resistor.
		Transistor (TR)	Replace defective transistor.
		Connection of connector CN12	Check the connector.
		Malfunction of circuits on PCB	Replace the PCB.

(2) Servo Amplifier Unit

No.	Problem	What to Check	Measures to Take
7	No-fuse breaker is tripped.	Connection at output terminals (U, V, W, and E) for short, grounding and wrong connection	Correct wiring.
		Transformer on BDC board	Replace defective transformer.
		Power transistors (TR1 - TR6)	Replace defective power transistor. *Note:* *If a power transistor is faulty, the fuse (base circuit protection fuse, 0.5 A) on the BDC board might be blown, or base current amplifying transistor (ET206) might be faulty. If this occurs, the BDC board itself must be replaced.*
8	Fuse at the primary side of the control transformer is blown. (on BDC board; 2 A × 3 pcs.)	Wiring to three BDC board transformers	Correct wiring.
		Transformers on BDC board	Replace defective transformer.
		Wrong fuse	Replace fuse.
9	Fuse at the secondary side of the base circuit is blown. (0.5 A fuse soldered on BDC board)	Power transistor (TR1 - TR6)	Replace defective power transistor. For replacing, refer to No. 7.
		Output transistor ET206	Replace defective output transistor ET206.
10	LED "PH" lights up. (Phase-loss alarm)	Refer to No. 3.	Refer to No. 3.
		Fuse (2A) on BDC board	Refer to No. 8.
		Transformers on BDC board	Replace defective transformer.
		Connection of the unit connector (CN10) and BDC board connector (CN7)	Check connectors.
		Malfunction of SVC No. 2 BDC board	Replace SVC No. 2 BDC board.
11	LED "LV" lights up. (Low-voltage alarm)	Tripping of no-fuse breaker of servo amplifier	Refer to No. 7.
		LED "LV" of DC-PS unit; is it lighted up?	Refer to No. 4.
		Connection of the BDC connectors (CN9, CN6) and SVC No. 2 board connector (CN5)	Check connectors.
		Malfunction of SVC No. 2 board and BDC board	Replace defective board, SVC No. 2 board, or BDC board.

No.	Problem	What to Check	Measures to Take
12	LED "IOC-M" lights up. (Motor overcurrent alarm)	Setting of SW1 and SW2 on SVC No. 2 board	Re-set SW1, SW2 according to Servo Characteristic Chart.
		Connection at output terminals (U, V, W, and E) for short, grounding and wrong connection	Correct wiring.
		Power transistor (TR1 - TR6)	Replace defective power transistor. For replacing, refer to No. 7.
		Connection of SVC No. 2 board connectors (CN7)	Check connectors.
		Malfunction of SVC No. 1 and No. 2 board	Replace defective board, SVC No. 1 board, or No. 2 board.
13	LED "IOC-S" lights up. (inverter short alarm)	Setting of SW7 on BDC board	Re-set SW7, according to Servo Characteristic Chart.
		Connection at output terminals (U, V, W, and E) for short, grounding and wrong connection	Correct wiring.
		Power transistor (TR1 - TR6)	Replace defective power transistor. For replacing, refer to No. 7.
		Connection of the BDC board connectors (CN9, CN6) and SVC No. 2 board connector (CN5)	Check connectors.
		Malfunction of SVC No. 2 board and BDC board	Replace SVC No. 2 board or BDC board.
14	LED "HV" lights up. (High-voltage alarm)	Refer to No. 5.	Refer to No. 5.
		Connection of the BDC connectors (CN9, CN6) and SVC No. 2 board connector (CN5)	Check connectors.
		Malfunction of SVC No. 2 board and BDC board	Replace SVC No. 2 board or BDC board.
15	LED "VR" lights up. (PCB control power supply alarm)	Voltage across COM and +12 V, and COM and −12 V at check terminals of SVC No. 2 board; they must be +12 V and −12 V, respectively.	Replace SVC No. 2 board or BDC board.
		Connection of the BDC connectors (CN6) and SVC No. 2 board connector (CN5)	Check connectors.
		Connection of connectors (CN1, CN2) in 5 V power supply (LT-1B) mounted on SVC No. 2 board	Check connectors.

Note 1: How to Check Power Transistors

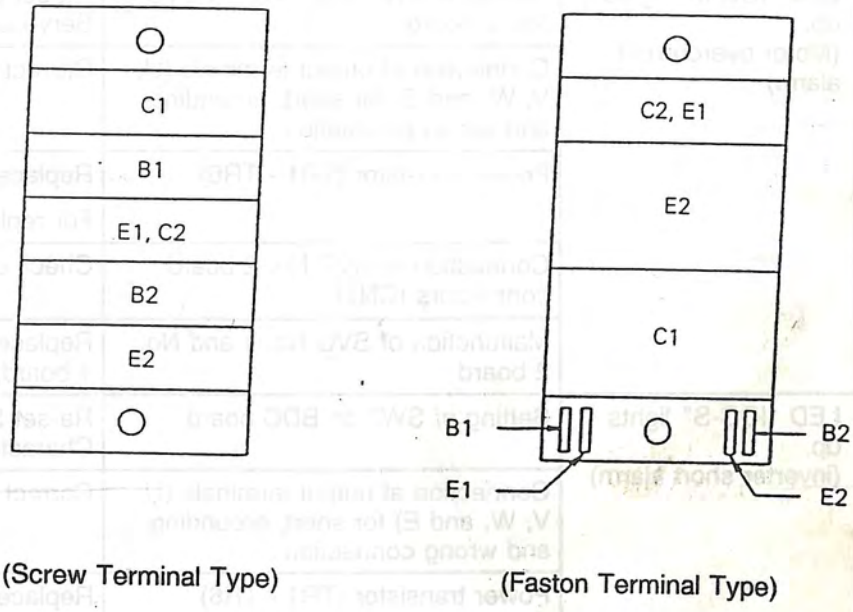

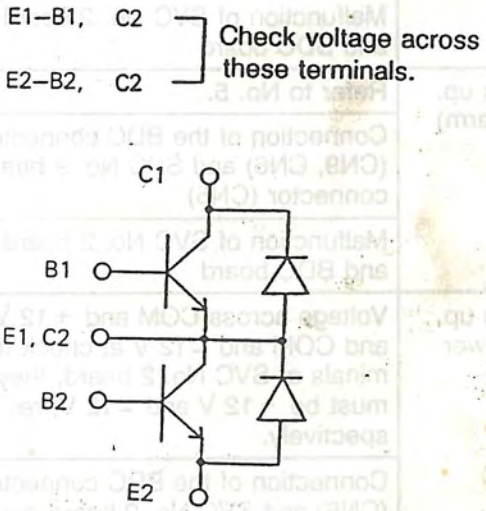

Fig. 3-13 Equivalent Circuit of Power Transistor

B0 29

No.	Problem	What to Check	Measures to Take
16	LED "E8" lights up. (Encoder pattern data alarm)	Wiring between connector CN1 at SVC No. 1 board and ECP Ⅱ, and between CN2 and motor incorporated encoder	Check connector and cable. (Mainly, upper digit signal line)
		Malfunction of motor incorporated encoder (upper digit)	Replace motor incorporated encoder.
		Malfunction of SVC No. 1 board	Replace SVC No. 1 board.
17	LED "MPR" lights up. (Encoder velocity alarm)	Wiring between connector CN1 at SVC No. 1 board and ECP Ⅱ, and between CN2 and motor incorporated encoder	Check connector and cable. (Mainly, MPR signal line)
		Malfunction of MPR of motor incorporated encoder	Replace motor incorporated encoder.
		Malfunction of SVC No. 1 board	Replace SVC No. 1 board.
		Motor speed; higher than 3,750 rpm(min^{-1})? (speed command voltage normal?)	Replace ECP Ⅱ board. Check connector and cable.
18	LED "APA" lights up. (Encoder check data alarm)	Wiring between connector CN1 at SVC No. 1 board and ECP Ⅱ, and between CN2 and motor incorporated encoder	Check connector and cable.
		Malfunction of motor incorporated encoder	Replace motor incorporated encoder.
		Malfunction of SVC No. 1 board	Replace SVC No. 1 board.
		Excitation signal from ECP Ⅱ for motor incorporated encoder	Replace ECP Ⅱ card, card 4, or distribution card.
		Is reset pulse (ALOFF) input to CN5 of SVC No. 2 board from ECP Ⅱ after power supply is turned on?	Check connector and wiring.

FC
FB

MPR

(3) Brushless Servomotor Operations

No.	Problem	What to Check	Measures to Take
19	Servomotor does not rotate even when a command is given.	Are magnet switches in DC-PS unit and servo amplifier unit ON?	1) Check connector (CN4) in DC-PS unit. 2) Check connectors (CN5, 6, 7, 8, 9 and 10) on PCB in DC-PS unit. 3) Check connector (CN10) in servo amplifier unit.
		Is LED "SAOP" on SVC No. 2 board off?	1) Check SW6 of SVC No. 2 board. 2) Check connector (CN1) on SVC No. 1 board. 3) Replace the SVC board.
		Is input signal correct?	1) Check waveform at check terminals on SVC No. 2 board; COM-Iuo, COM-Ivo. 2) Check connector (CN1) on SVC No. 1 board.
		DC-PS unit function	Refer to (1).
		Servo amplifier unit function	Refer to (2).
		Wiring to brushless servomotor	Correct wiring.
20	Irregular rotation of servomotor	Connector (CN5) of SVC No. 2 board	Check connector.
		Connection to brushless servomotor (loose connection)	Check wiring.
		Malfunction of SVC board and BDC board	Replace SVC board, or BDC board.
		Matching error between servo amplifier and machine	1) Lower position loop gain Kv value (VR - VCOM) 2) Change velocity loop gain (VR - VLG) 3) Change velocity feedback amount (VR - VNFB)
		Malfunctioning position encoder	Replace defective encoder.

4-2-3. Precaution to Observe for Maintenance

(1) Before operating the no-fuse breaker of the DC power supply unit and servo amplifier unit, always turn off the no-fuse breaker (main circuit breaker) at the control box.

(2) Before replacing fuses, or printed circuit boards, or checking terminal screws, always turn off the main circuit breaker at the control box and press the discharge pushbutton of the condenser for above 20 seconds.

(3) When replacing the SVC board or BDC board, set the switches according to the Servo Characteristic Chart.

Since current feedback, overcurrent detection, and other setting are all made by the switches, power transistors will be faulty if setting is not made correctly.

(4) If a power transistor is faulty, base circuit protection fuse might be blown depending on damaged mode, and output transistor ET206 might further be faulty. Therefore, check the power transistor and BDC board when carrying out repair.

5. Release of Stroke End Limit

Open the control box door at the bottom of the CRT operation panel, with the stroke end release button as illustrated below will be found in the control box.

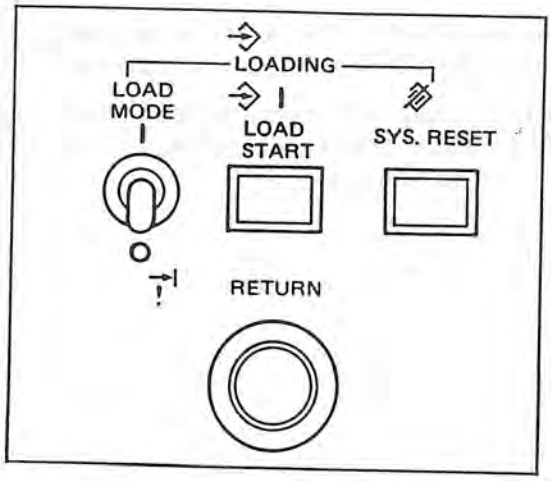

When the emergency limit switch at each end of the X-axis, Y-axis, and Z-axis is tripped, the corresponding L. S. EMERGENCY lamp lights up. If any one of these lamps lights up, the servo drive unit power supply units will turn OFF for all axes; but as long as the **RETURN** button is held down, the servo drive unit power supply unit remains ON. Therefore, if any cause activates the emergency limit switch, press the **RESET** button again, while pressing the **RETURN** button, and move the axis manually away from the emergency limit position. The machine then returns to a normal state, so even if the **RETURN** button is released, the machine will return to the previous normal condition.

6. Inspection of Position Encoder

The position encoder detects the present position of each axis accurately. Any fault in this encoder prevents the present position from being found easily, which will result in any of the following troubles.

- Rough cut surface
- Hunting
- APA check data alarm, APA pattern data alarm, APA speed alarm and DIF over alarm

Checking The Position Encoder:

While moving each axis slowly with the pulse handle, check that the output value from the position encoder changes smoothly by the following procedures.

(1) Obtain the CHECK DATA *NC AXIS DATA* page on the CRT.

(2) Then, the position detected value of each axis, RAPA, operational value RCON, and the difference RDIF can be monitored. Here, note the RAPA, the position detection value of the axis to be checked.

(3) Switch the mode to MANUAL, and move the axis slowly with the pulse handle.

- Check that the value changes from the smaller digit slowly.
- Check that no value is omitted and that no value repeats.
- Check that the digit carry is done properly.

Normal case:

18 → 19 → 20 → 21 → 22 . . . . .

Abnormal case:

18 → 20 → 21 → 22 . . . . . .
18 → 19 → 21 → 20 . . . . . .

If the value and change are not normal, it can be assumed that there is a fault in the encoder. In addition, there is a possibility that there is a fault in the connector contact or the CPU printed circuit boards.

7. CPU

This section describes matters related to the CPU. The complete operation of the NC machine is described in Section 2, 3. "Operation and Structure of the NC", and should be referred to.

7-1. Operation and Structure of the CPU

Refer to Fig. 2-5.

As described in Section 2, 3., the main component of the OSP5020M/OSP500M-G is the CPU, which consists of BOARDs and CARDs added to the BOARD. The CPU employs "Multi-processing system" in which the axis control processor on the SVP BOARD-Ⅱ, and the machine control processor and interface provided on the ECP BOARD-Ⅱ operate under the control of the main processor on the MAIN BOARD-ⅡB. For each processor, a high-performance microprocessor is used and for the IC memory, a high-speed very large scale IC memory is used in order to accomplish high-grade NC functions. In addition to the IC memory, a bubble memory for storing machining programs and control program (control software) storage is provided. The bubble memory is a read/write memory, allowing stored data to be altered as needed. Its memory capacity is up to 6 M bytes.

Signals are communicated between each processor and external equipment (tape reader, position encoder, operation panel, servo drive, etc.) through the interface circuit contained in the BOARD or CARD.

The OSP5020M/OSP500M-G is a computer NC with control programs (control software) designed specially to each user's specifications, and delivered as control tapes with each NC system. The operation to store control software into the bubble memory is called software loading.

When the specifications are changed or a bubble memory is replaced, loading is required.

The power supply unit supplies all power required for the CPU. An AC 200V input direct switching method is employed because it gives high efficiency and causes less heat generation.

Refer to Fig. 3-15 for CPU and Power Supply Unit.

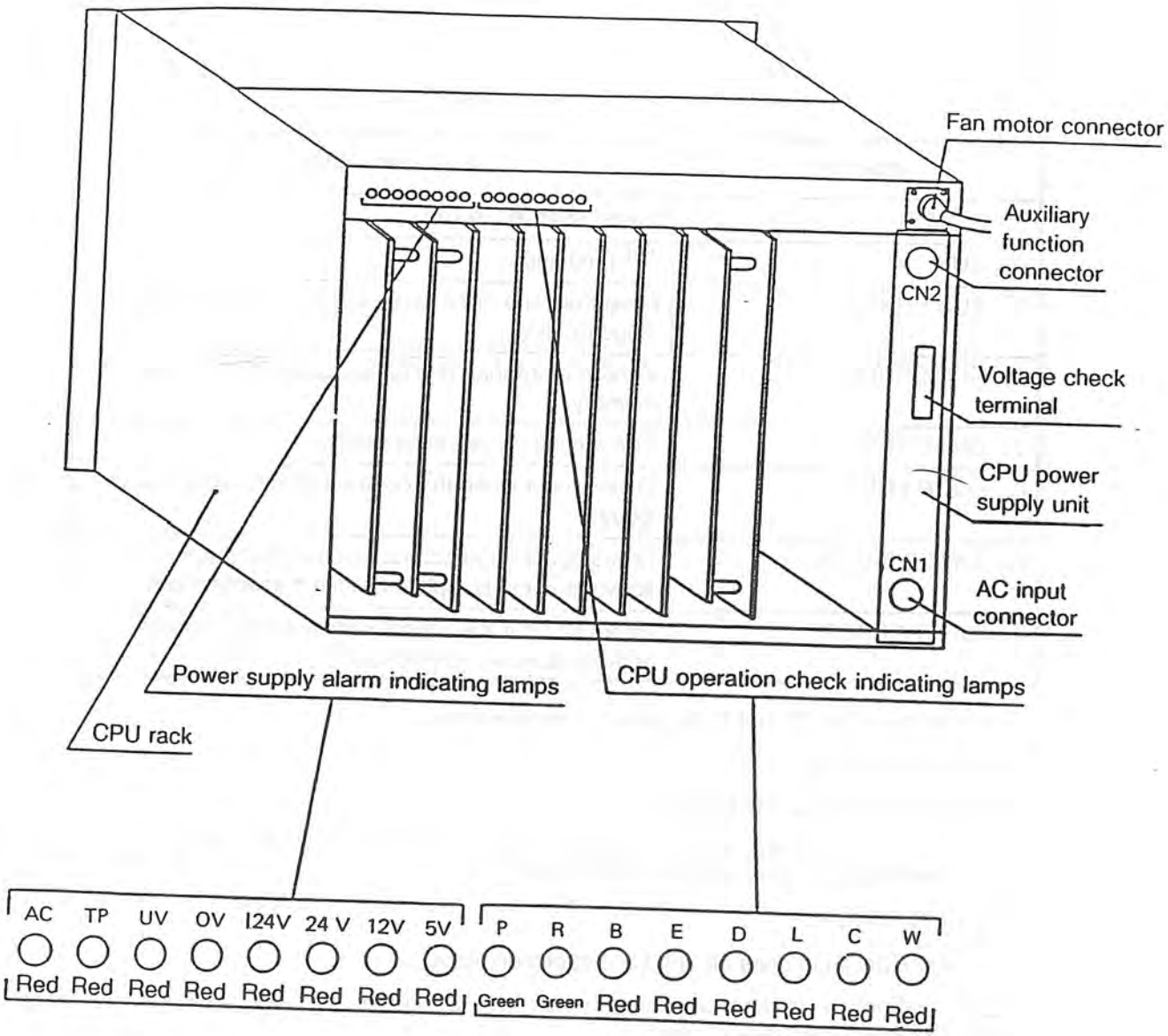

Fig. 3-15 CPU and Power Supply Unit

7-2. Checking CPU Operations

Simple checking for proper computer functioning can be carried out by checking if the indication on the CRT screen operates properly. For example, try to change the page indicated on the CRT screen. If the page is actually changed, it can be assumed that the computer works well. In order to check what condition the computer remains in, make a check by the CPU operation check indication on the CPU.

Refer to Fig. 3-15.

Table 3-4 CPU Operation Check Indication

Indication	Indication Contents
P: POWER	Power supplied to CPU
R: RUN	CPU running
B: BUS ERROR	More than one error occur at the same time. CPU stops running.
E: ECC ERROR	Error in more than one bit are caused in the main memory.
D: DIA ERROR	Errors occur in self diagnostics.
L: LOOP ERROR	Errors occur when the control software execution is looped.
C: CYCLE ERROR	Errors occur if the control command of the control software is not completed within a specified time.
W: WPRT ERROR	Errors occur if the control software enters memory address area not yet defined.

- Two lamps, POWER and RUN, light in normal condition.
- When errors occur

  For any error except BUS ERROR:

  The CPU continues running and processes errors, and the CRT screen on the operation panel indicates the contents of the errors.

  For BUS ERROR:

  The RUN lamp goes off and CPU operation stops.
- Error indication means abnormality in the computer and will not go off when the OSP5020M/OSP500M-G is reset.
- To start NC operation again, switch OFF the power and then switch ON again. The computer starts RUN automatically and goes into NC operation several tens of seconds later.
- If the abnormality is continuous, the error occurs again and the computer stops. When the computer carries out normal NC operation, continue using it and observe the operation.

7-3. CPU Power Supply

The power supply for the CPU has the arrangement shown here.

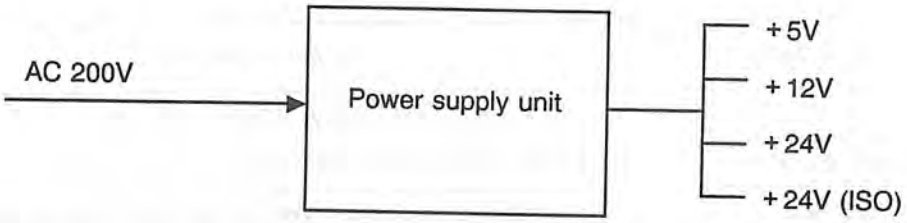

AC 200V is input into the power supply unit and this supplies the voltage required for the CPU. This unit is mounted on the CPU as shown in Fig. 3-15. For the connection with the CPU, input of AC 200V, and for connection with other devices, dedicated cables and connectors are used. Each output voltage is supplied for the following destinations.

+5V	Power supply for IC's in CPU
+12V	Bubble memory, position encoder, spindle pulse generator, manual pulse generator
+24V	Bubble memory, tape reader
ISO +24V	Power supply for EC input/output isolator (Power may be supplied from another power supply.)

Voltage check terminals for each output are provided to check these output voltages. A variable resistor to adjust the voltage is provided for +5V. Refer to Fig. 3-15.

This power supply has the function that continuously monitors input/output voltage and temperature. When an abnormality occurs, the cause is indicated by the power supply alarm indicating lamps indicated below, and CPU operation stops.

Table 3-5 CPU Power Supply Alarm Indication

Indication	Indication Contents
AC INPUT UV ALARM	Input voltage (AC 200V) dropped too low
OVER TEMP ALARM	Power supply unit temperature rose too high
UNDER VOLTAGE	A voltage dropped too low (including short-circuit)
OVER VOLTAGE	A voltage rose too high
ISO24V +24V +12V +5V	The voltage on which UNDER VOLTAGE or OVER VOLTAGE alarm has occurred is indicated.

- When any of these alarm lamps lights, power supply to the CPU is turned OFF and the CPU stops running.
- This alarm indicates an abnormality in the power supply unit or in the input and output parts. In this case, all power supplies in the NC system, including the operation panel, are cut off.
- To start the NC operation again, turn OFF the AC input to the NC system once (switch OFF the main breaker), and turn back ON the main breaker after confirming that the alarm indication disappears several tens of seconds later. Then press the **POWER ON** pushbutton. The CPU starts running automatically and the OSP5020M starts operation.
- If the abnormality is continuous, the power supply alarm comes on again, but if the CPU runs normally, continue using it and observe the operation.

8. EC I/O Unit

The EC I/O unit consists of one communication card and multiple input and output cards. Three types of input and output cards are available as indicated below. The number of output signals and the input/output operation differ depending on their combination.

Input Card:

- Fieldnet Input Photocoupler (FIPC)

Output Card:

- Fieldnet Output High Transistor (FOHT)
- Fieldnet Output Power Transistor (FOPT)

Communication Card:

- Communication Control Optical (CCOP)
- Communication Control Optical 2 (CCOP2)
- Communication Control Optical 3 (CCOP3)

8-1. Fieldnet Input Photocoupler Card (FIPC)

As illustrated below, one card can handle a total of 16 signals, and two cards (32 input signals) can be used at one child station.

This card is used for reading input signals from limit switches, relay contacts, and other switches. The card is used only at the child station inside the terminal box.

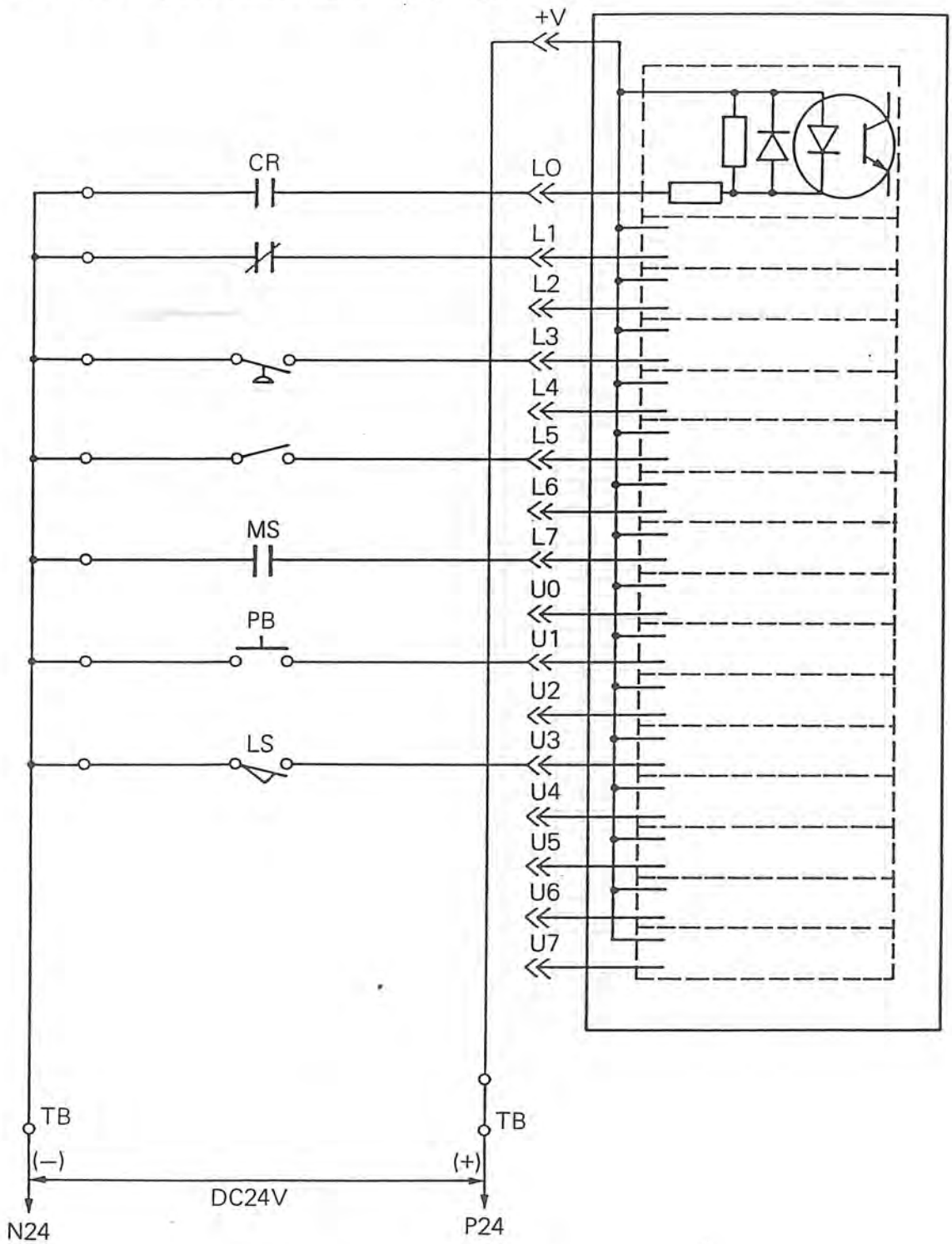

Fig. 3-16

8-2. Fieldnet Output High Transistor Card (FOHT)

As illustrated below, one board can handle a total of 32 output signals. One card can be used for each communication card. This card is used for driving the DC controlled small LEDs and control relays in the control box.

This card cannot be used at the child station inside the terminal box since it causes temperature rise in the terminal box.

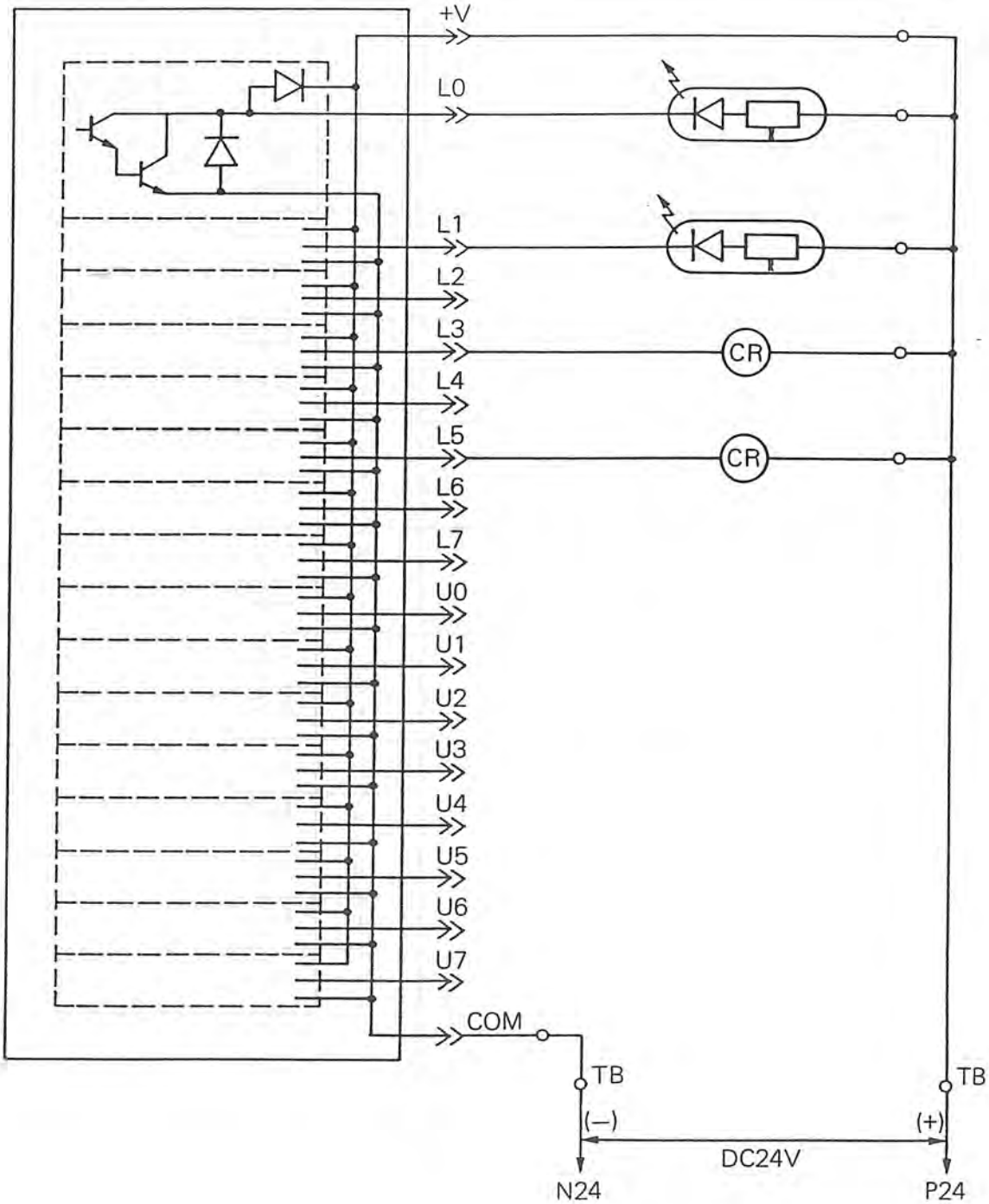

Fig. 3-17

8-3. Fieldnet Output Power Transistor Card (FOPT)

As illustrated below, one card can handle a total of 8 output signals, and up to four cards can be used for each communication card.

This card is used for driving the DC controlled solenoids, relays, and lamps.

The card is also used for driving DC controlled small LEDs and control relays at the child station inside the terminal box.

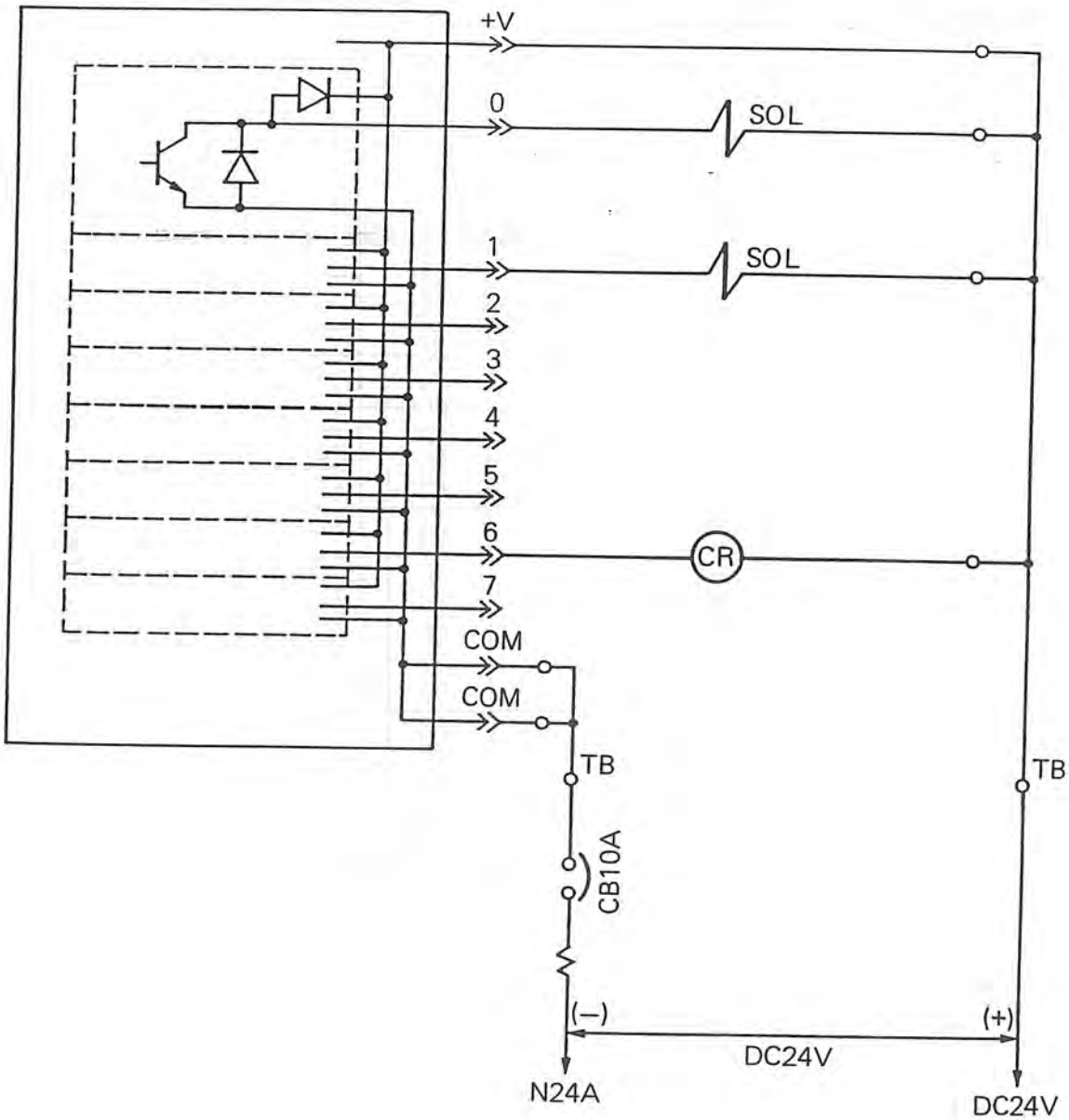

Fig. 3-18

8-4. Communication Control Optical Card (Inside the terminal box) (CCOP)

This card is used only at the child stations inside the terminal box. One communication card is necessary for each child station. The card serves to convert optical signals to electric signals.

8-5. Communication Control Optical Card (Inside the control box) (CCOP2, CCOP3)

This card is composed of the CCOP and the FIPC, and is used at the child stations inside the control box. One CCOP2 is used for each child station. When the number of input signals exceeds 32, up to three CCOP3 can be added.

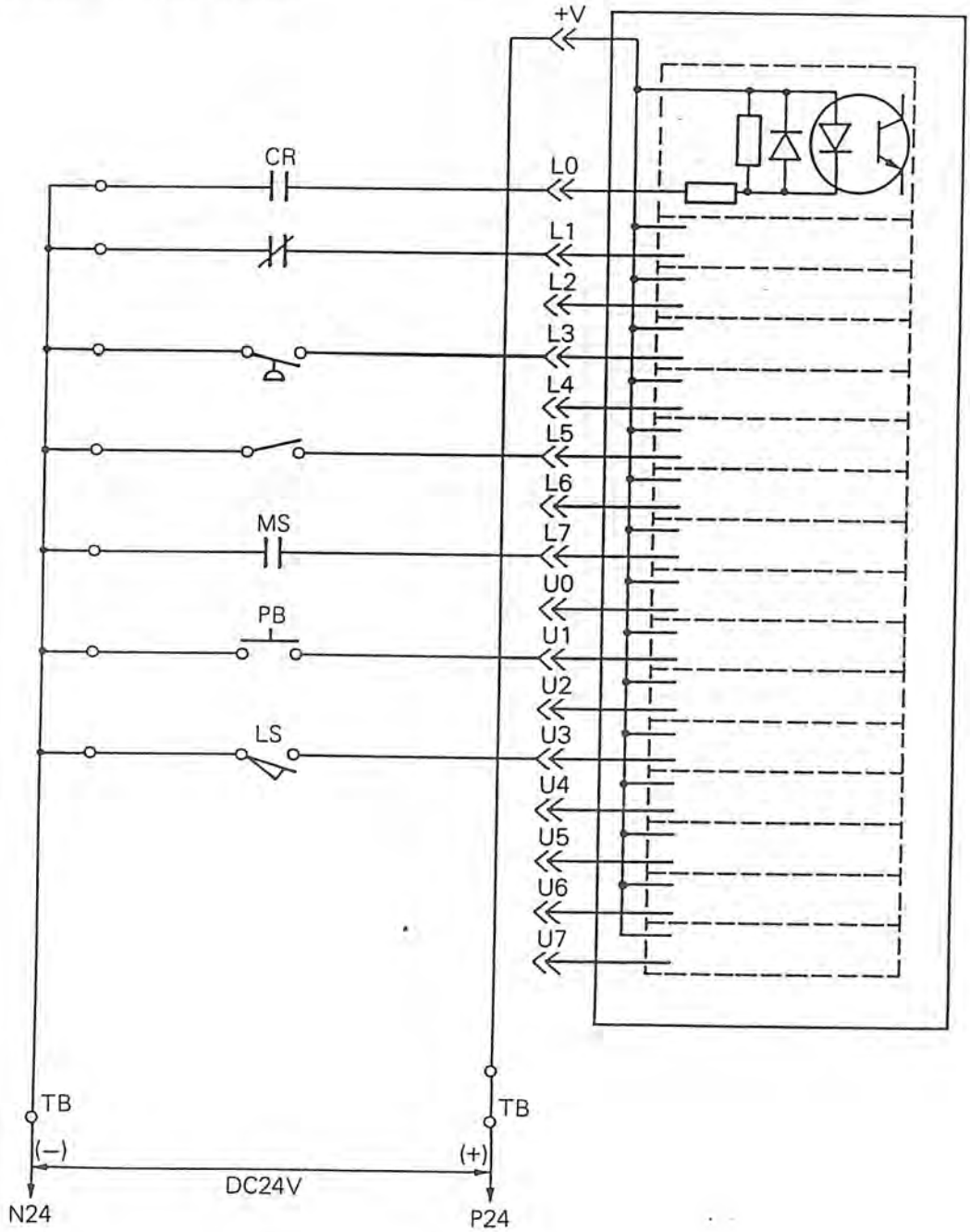

Fig. 3-19

9. Relay and Magnet Switch Circuits

The relay and magnet switch circuits control devices requiring high voltage which cannot be controlled by semi-conductors, such as motors, clutches, and solenoids. Since the relays and magnet switches can be checked visually, the operation check is relatively easy. Check according to the relay circuit diagrams provided for each machine.

9-1. Operation and Structure of a Relay and Magnet Switch Circuit

The same operation principle applies to all magnet relays.

When an energizing voltage is charged at both ends of the coil (a) and (b), an attractive force is generated in the coil and turns ON contact point A which is normally open (NO contact), and turns OFF contact point B which is normally closed (NC contact).

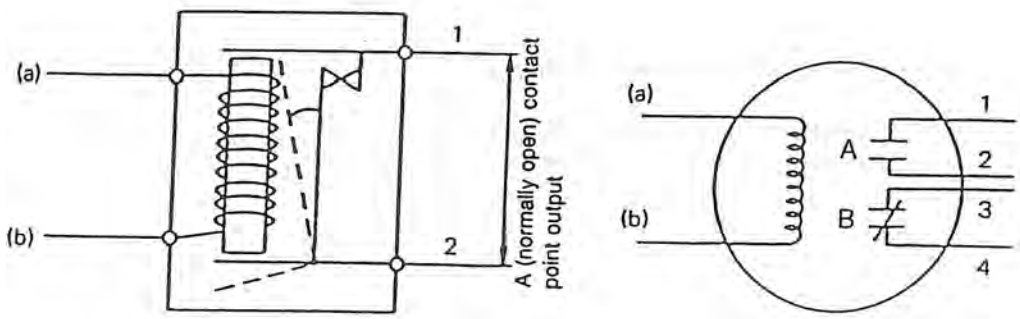

Fig. 3-20 Relay Operation

When the coil is energized, NO contact (A) is closed and NC contact (B) is opened.

On the other hand, when the coil de-energized, NO contact (A) is opened and NC contact (B) is closed. The coil will be energized by either DC voltage or AC voltage. Generally, most small relays are energized by direct current, while most large relays by alternating current.

With the OSP5020M/OSP500M-G, most of the relay control circuits are replaced by computer software, and only the absolutely necessary number of relays are used.

9-2. Inspection of Relays and Magnet Contactors

Large relays are called magnet contactors. They are mainly used to control motors.

(1) Operation Check of A Magnet Contactor (MS)

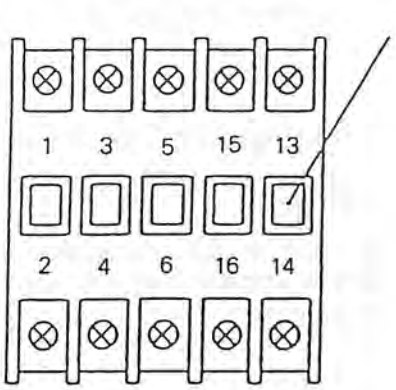

When a magnet contactor is actuated (coil is energized), this part is pulled in. When a magnet contactor is actuated, all connections such as 1-2, 3-4, 5-6, etc., are closed (ON) or opened (OFF).

Fig. 3-21 Magnet Contactor

When the magnet contactor is actuated:

If the connection between 1-2 is closed, it is called contact point "A", and indicated in a circuit diagram by the symbol (1).

(1)

If the connection between 1-2 is opened, it is called contact point "B", and in a circuit diagram by the symbol (2).

(2)

Sometimes troubles of a relay are caused. When the coil is energized, a contact point may fail to open and close (due to poor contact or foreign matter clogging), or the Part Ⓐ may occa-sionally remain pulled in (fused, etc) even when the coil is not energized.

The OSP5020M/OSP500M-G uses a miniature relay called MY relay, where ten relays are mounted on each printed board.

(2) Operation Check of Relay (CR)

The operation and work of the relay is the same as for the magnet contactor. For contact point A and B, it is also the same.

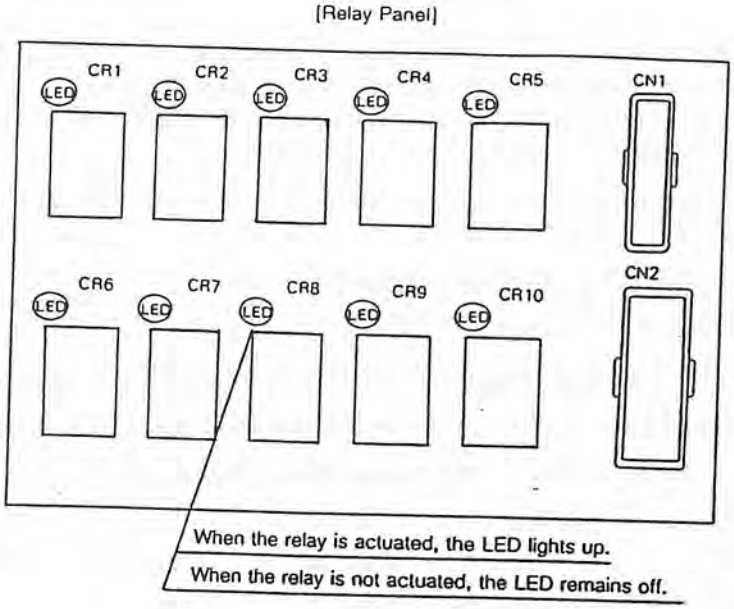

(3) Inspection of Overload Protection Relays and Fuses

For protecting motors and solenoids, etc., from overcurrent and overload, an overload relay is used.

To reset the tripped relay, push in the reset rod. Note that pushing in the reset rod right after the relay has been tripped, cannot reset the relay. Allow the switch to cool before resetting it.

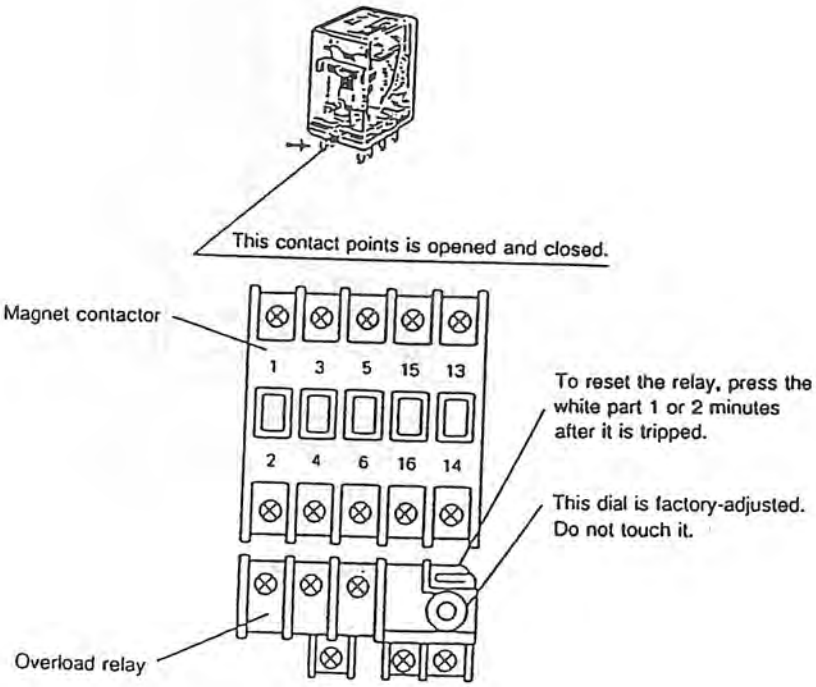

Fig. 3-22 Overload Relay

10. Replacing ECP-II Battery Pack

The CPU unit has the ECP-Ⅱ printed circuit board; the semiconductors on this PCB retain the machine related data. Generally, the data saved in semiconductor devices are lost when the power supply is turned off. However, the semiconductors on the ECP-Ⅱ PCB are backed up by the battery to retain the saved data even after the power is turned off.

When the battery voltage lowers, the following message appears on the screen to give a warning to the operator.

W03 Alarm D Battery voltage low

Battery Replacement Procedure:

1) Turn on the power supply to the NC to make sure that it operates correctly.
2) Remove the screws of the connector and the battery case. Replace the battery.
3) Connect the connector and tighten the battery case screws.

ECP-Ⅱ PCB Battery Specification:

E5503-490-002 (Okuma part number) Lithium battery (3.6 V) Toshiba

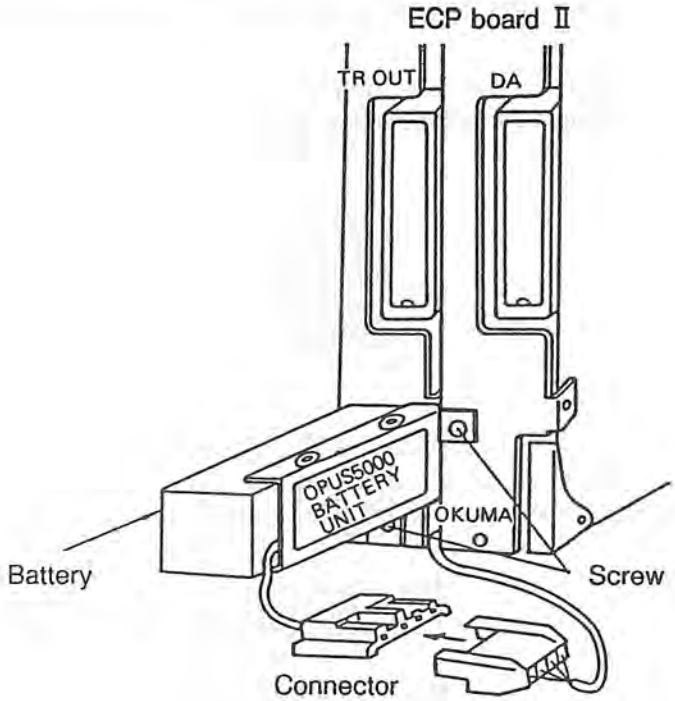

Fig. 3-23

SECTION 4 SPINDLE DRIVE UNIT FOR VAC MOTOR (VAC II)

1. Outline

Okuma VAC motors, providing sufficient performance as a spindle driver for machine tools, feature high reliability, wide constant output range, compact construction, etc.

Okuma VAC drive unit is a vector control type driver, using 16-bit micro-processors. It provides quick response and stable control.

2. Periodical Inspection and Maintenance

VAC motor and VAC drive unit do not require daily inspection. However, to maintain their high performance for a long period, it is recommended to inspect and clean the following points at least every six months.

For each of the inspection items, change inspection intervals depending on contamination degree.

Table 4-1 Inspection Items

Items to Check	How to Check	Measures to Take
VAC motor VAC drive unit: Cooling fan Fan guard (mesh) Ventilation hole	Check whether dust is accumulating.	Clean or blow away with compressed air or vacuum cleaner.

3. Constructions

The VAC drive unit construction is illustrated in Fig. 4-1.

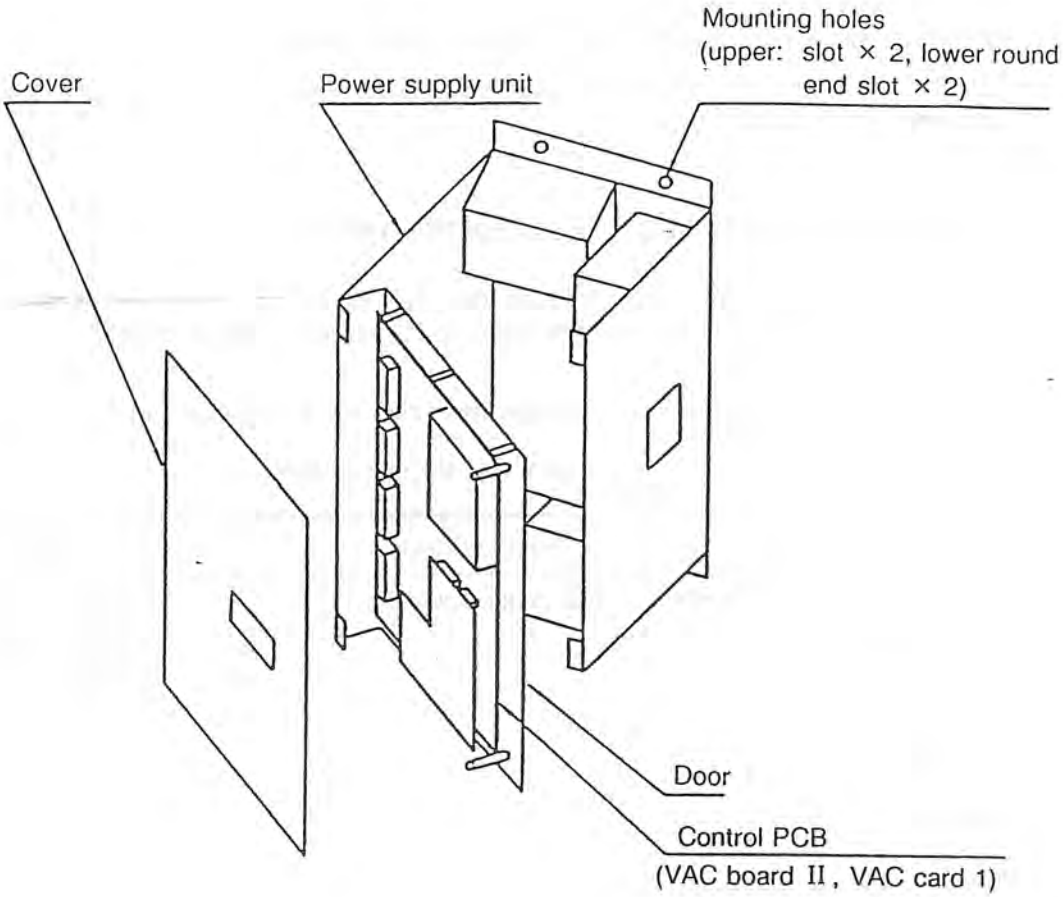

Fig. 4-1 VAC Drive Unit Construction (D3, D6, D8)

The control PCB and the cover are fixed to the power supply unit door with the screws. The power supply unit door can be opened by removing the screws at the upper and low right sides.

Arrangement of major component parts on the control PCB and the power supply unit are shown in Figs. 4-2 to 4-7.

3-1. Arrangement of Major Component Parts

Arrangement of component parts which should be checked at an occurrence of a problem is shown in Figs. 4-2 through 4-7.

Fig. 4-2 Major Component Parts Arrangement on Control PCB - VAC Board Ⅱ

Fig. 4-3 Major Component Parts Arrangement on Control PCB - VAC Card 1

Fig. 4-4 Major Component Parts Arrangement for Power Supply Unit - D6A, D8A

Fig. 4-5 Major Component Parts Arrangement for Power Supply Unit - D11A

Fig. 4-6 Major Component Parts Arrangement for Power Supply Unit - D22A

Fig. 4-7 Major Component Parts Arrangement for Power Supply Unit - D37A

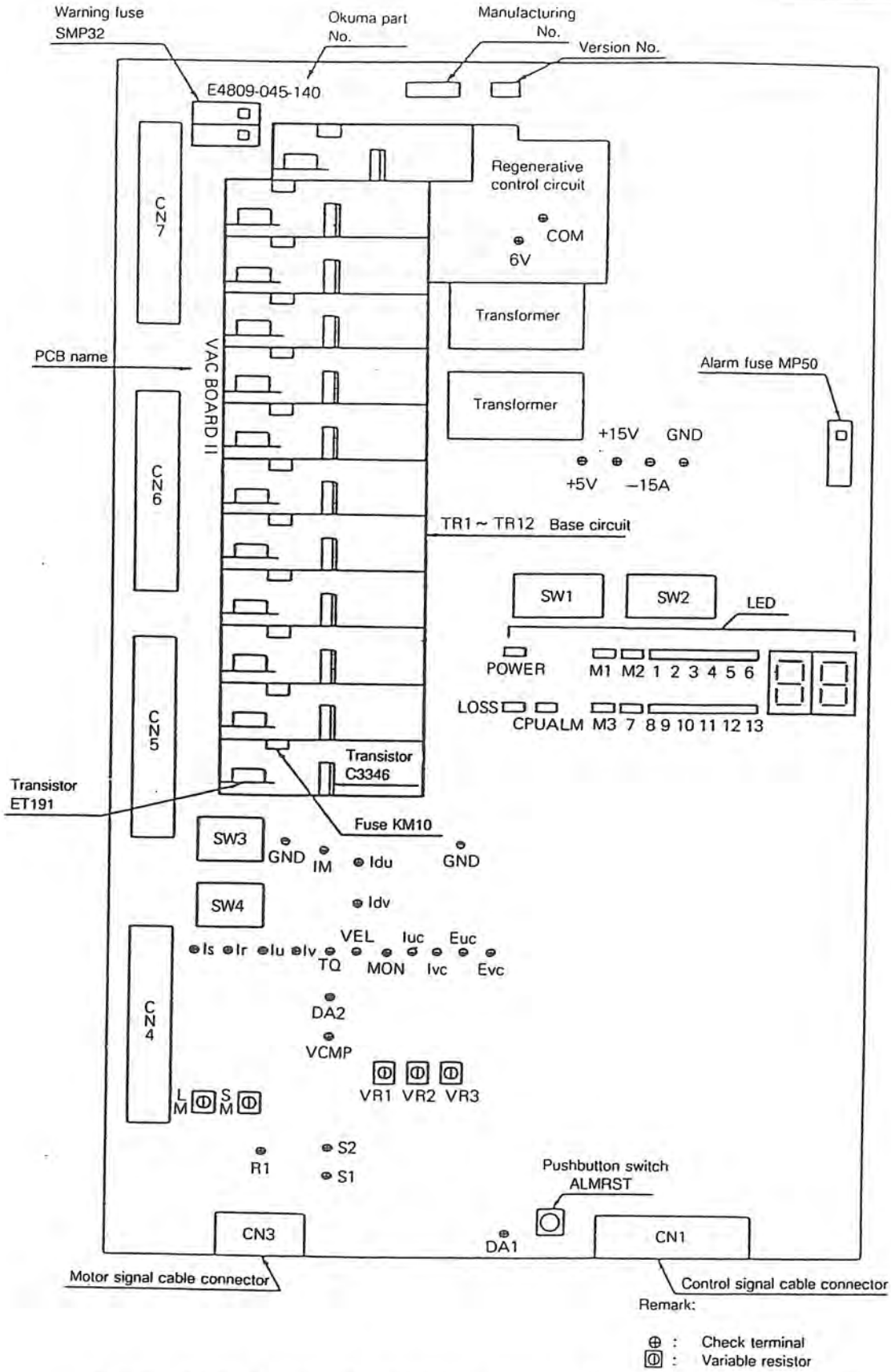

Fig. 4-2 Major Component Parts Arrangement on Control PCB - VAC Board II

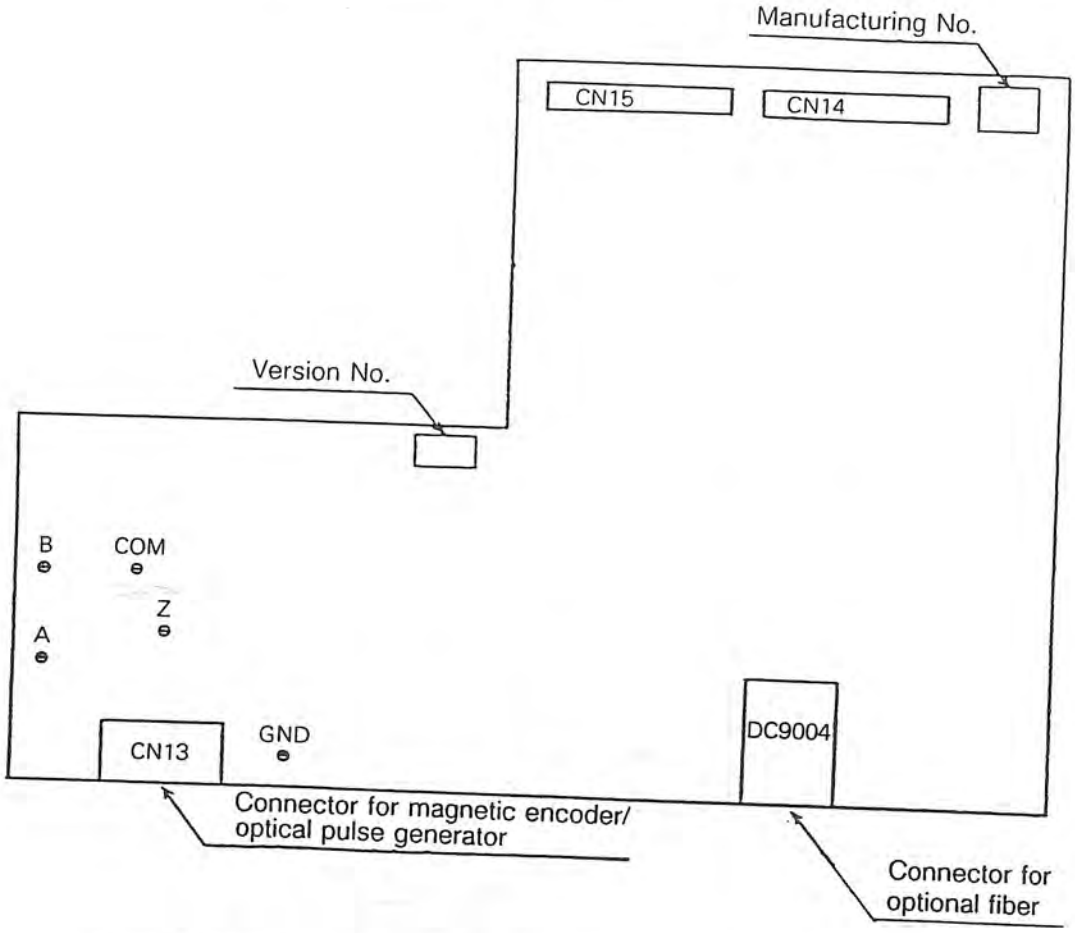

Fig. 4-3 Major Component Parts Arrangement on Control PCB - VAC Card 1

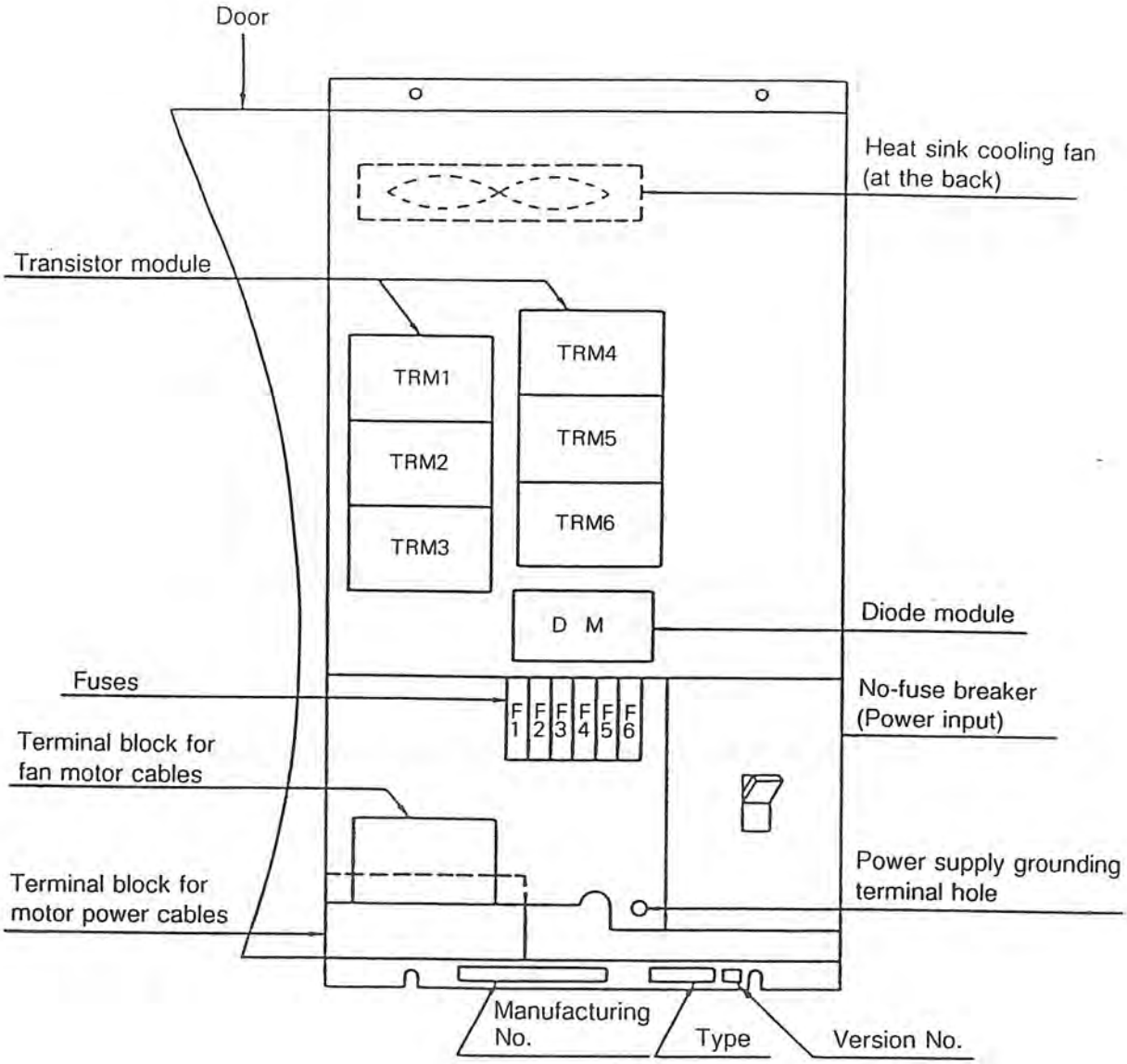

Fig. 4-4 Major Component Parts Arrangement for Power Supply Unit - D6A, D8A

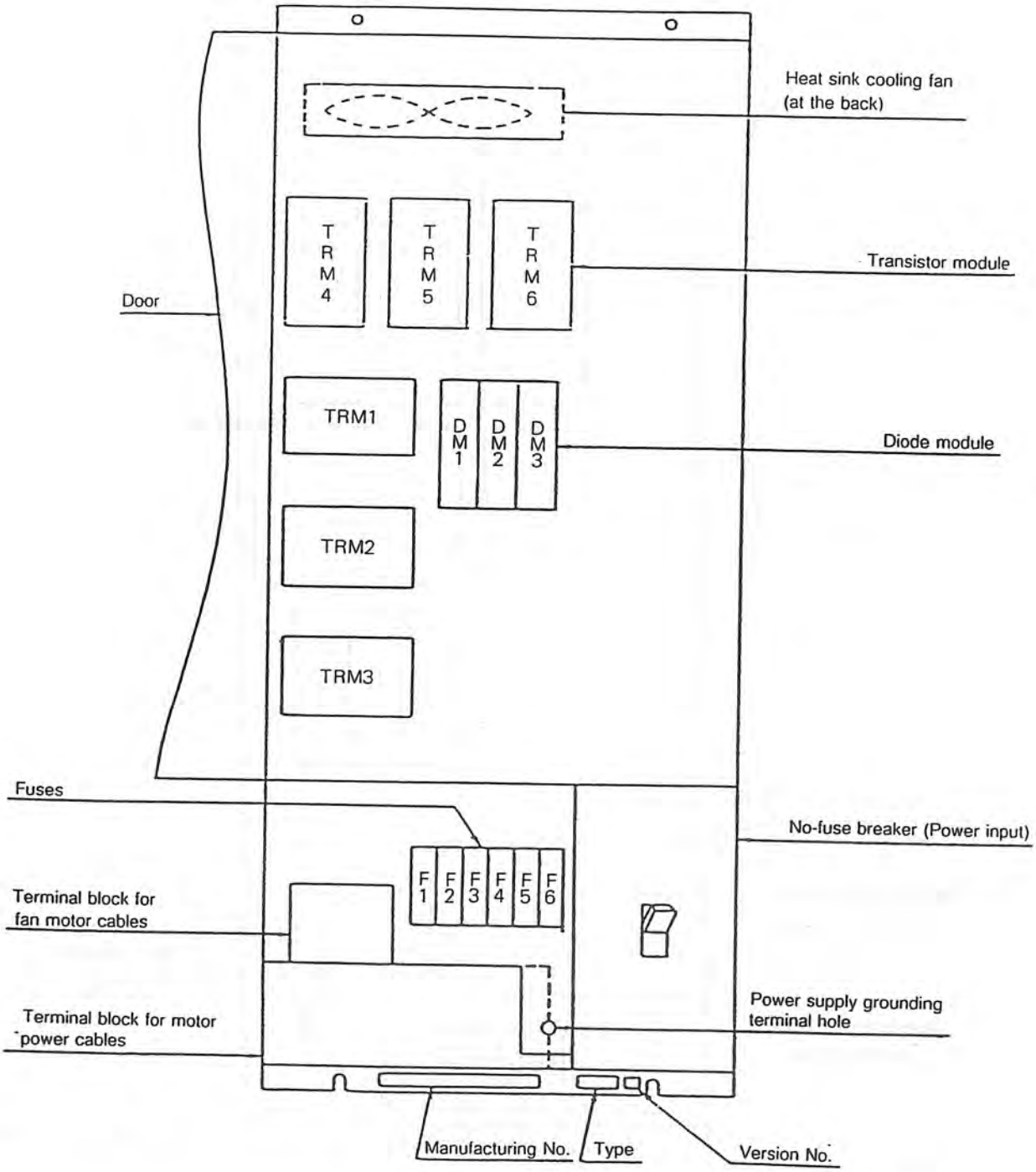

Fig. 4-5 Major Component Parts Arrangement for Power Supply Unit - D11A

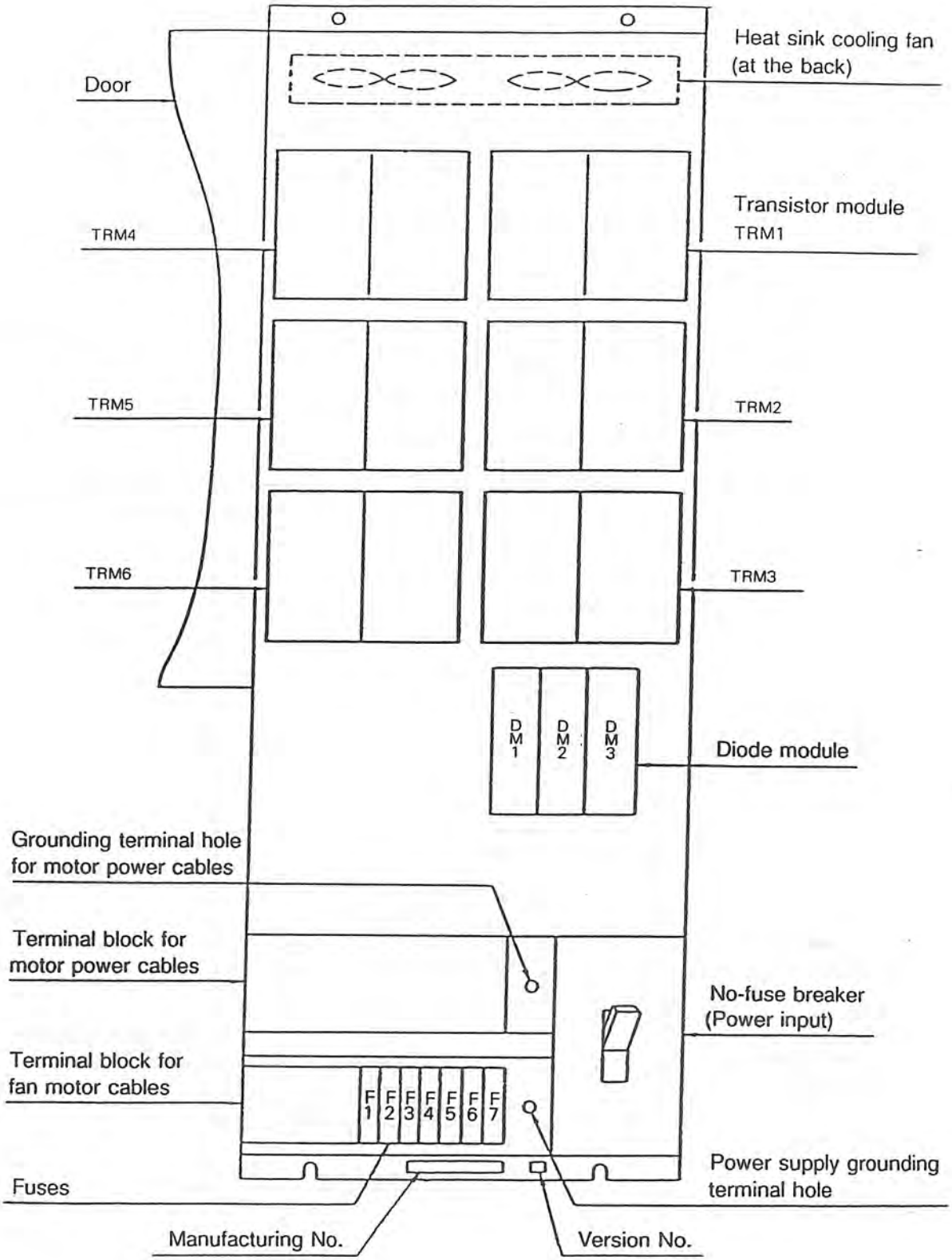

Fig. 4-6 Major Component Parts Arrangement for Power Supply Unit - D22A

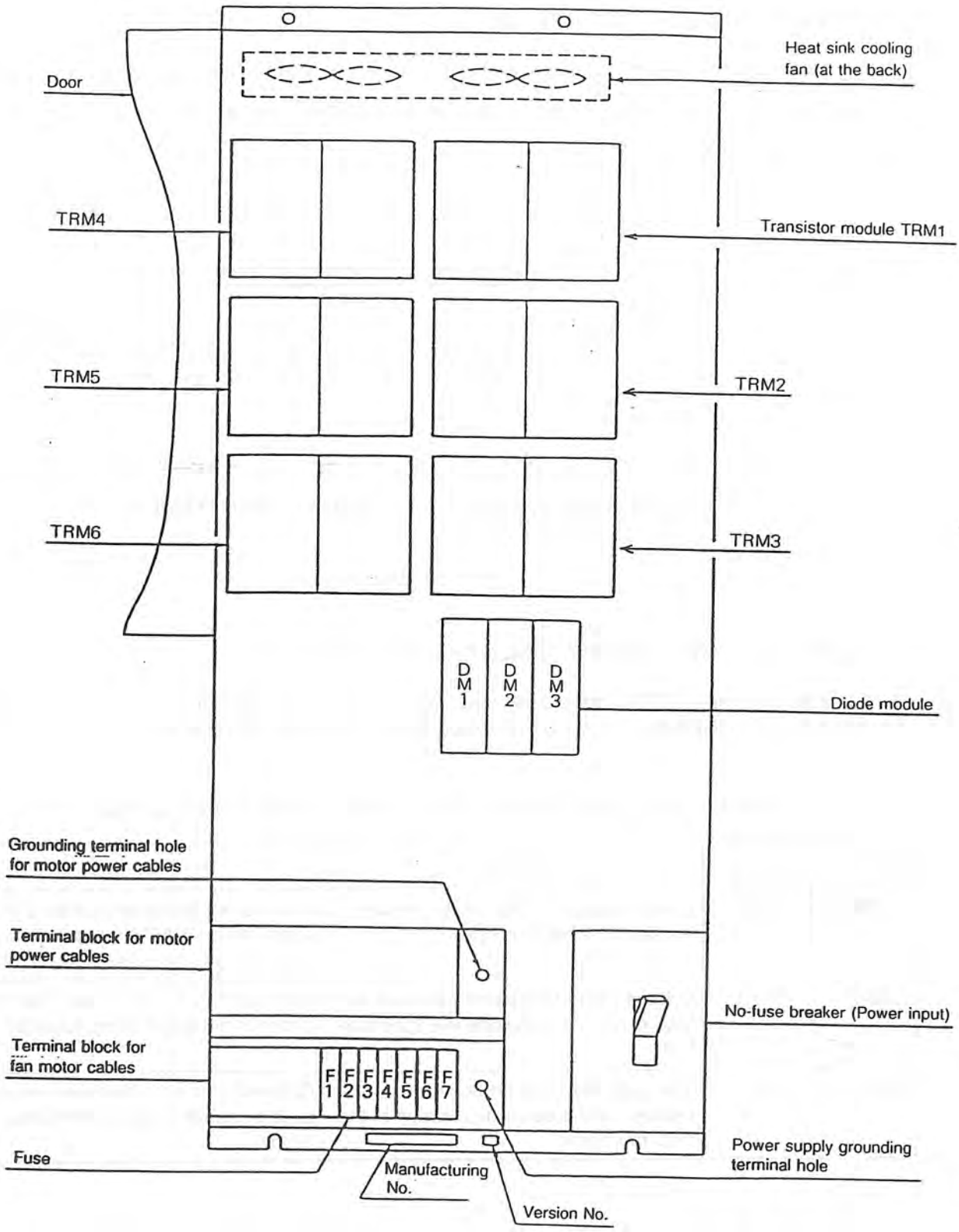

Fig. 4-7 Major Component Parts Arrangement for Power Supply Unit - D37A

4. Operation Status Indication

The VAC drive unit has LED's on the control printed circuit board to indicate the operation status. Lighting conditions of the LED's can be checked through the opening in the cover.

Fig. 4-8 shows the LED names.

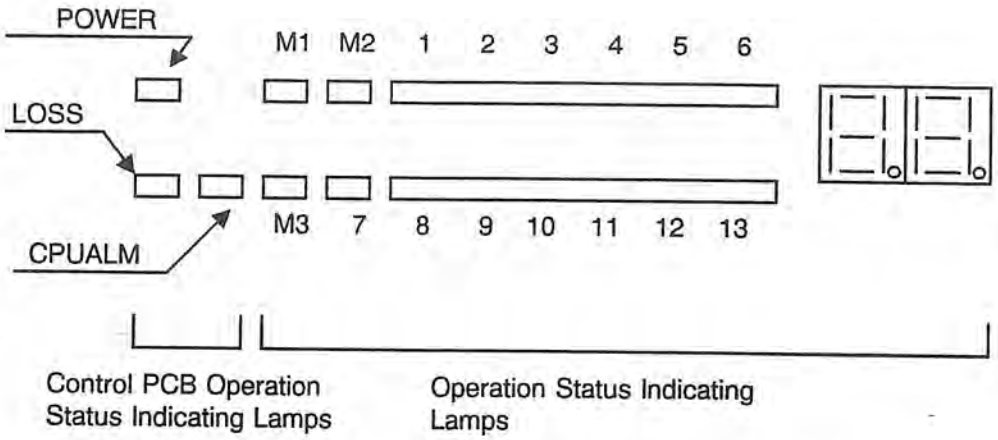

Fig. 4-8 LED Names

4-1. Control PCB Operation Status Indicating Lamps

The following three LED's indicate the operation status of the VAC drive unit. The relationship between the lamp illumination and PCB operation status is indicated in Table 4-2.

Table 4-2 Relationship between LED Illumination and PCB Operation Status

Name	Color	Operation	Remarks
POWER	Green	Power supply for VAC drive unit control circuit is being supplied.	If this is not illuminating while power supply to the VAC drive unit is on, it indicates an occurrence of a trouble.
LOSS	Red	Voltage in the calculation circuit of the VAC drive unit is outside the specification.	If this LED is turned on, the calculation circuit is not functioning normally.
CPUALM	Red	The lamp indicates an occurrence of a problem in the calculation circuit in the VAC drive unit.	Contents of the problem are indicated by the operation status indicating lamps.

4-2. Operation Status Indicating Lamps

The LED's M1, M2 and M3 indicate the operation status of the VAC drive unit and the VAC motor.

There are two different operations status as "normal operation" and "faulty operation". They are indicated by the following LED illumination conditions.

Normal operation .... M1, M2 and M3 are all OFF

Faulty operation ..... M1, M2 and/or M3 is ON or flickering.

4-2-1. Normal Operation Status Indication

While the VAC drive unit is operating normally, the LED's indicate the input/output status of the input/output signals. These input/output signals are shown in Fig. 4-9 (for the standard and winding changeover specifications).

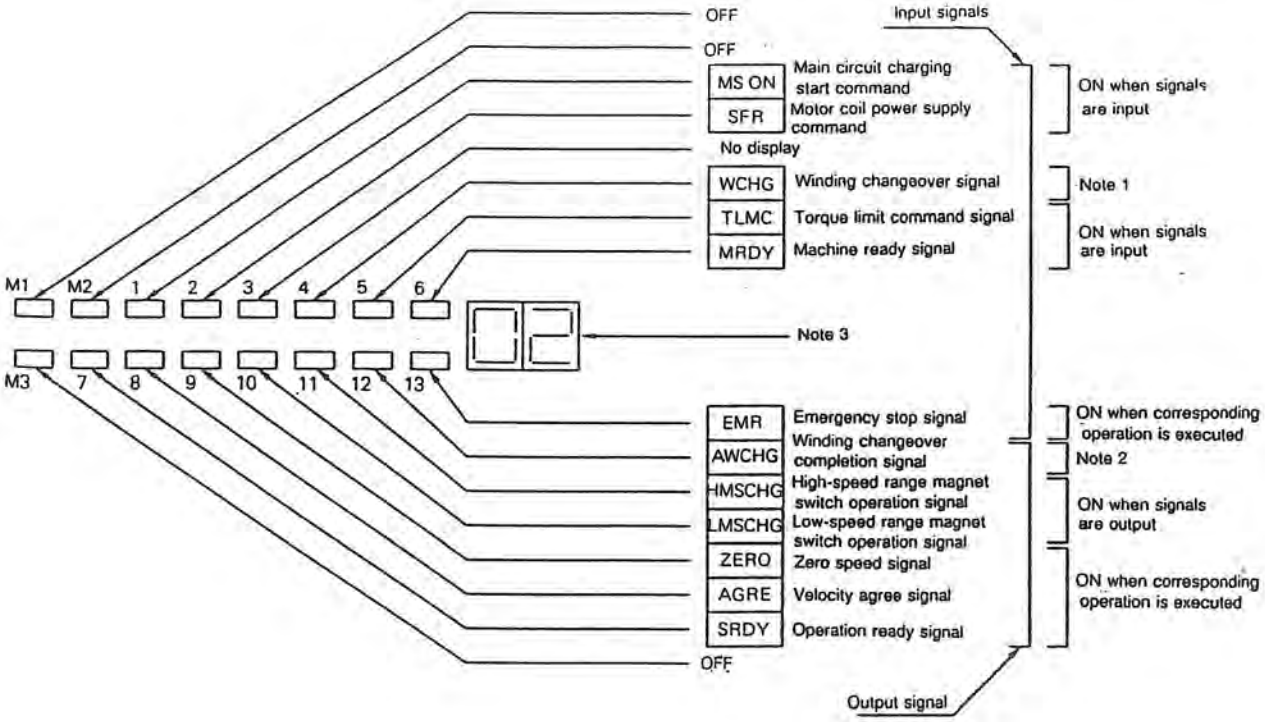

Note 1: *WCHG Winding changeover signal*

ON .... when the high-speed range winding selection command is input
OFF .... when the low-speed range winding selection command is input

Note 2: *AWCHG Winding changeover completion signal*

ON .... when the high-speed range winding selection is completed
OFF .... when the low-speed range winding selection is completed

Note 3: *When the power to the machine is turned on, it indicates "01". When the control power is turned on and the NC is ready, the indication changes to "02".*

Fig. 4-9 Signal Assignment at LED's for Normal Operation

4-2-2. Failure Operation Status Indication

A faulty operation status is indicated by the LED's M1 and M2 in the following conditions.

(a) M1 and M2 flicker simultaneously.

(b) M1 lights up.

(c) M2 lights up.

LED's other than M1 and M2 light up corresponding to the failure conditions occurred to indicate them.

On the VAC II control PCB, the 7-segment LED displays the failure operation status by the 2-digit number.

The alarm information is transferred to the NC unit, and alarm name and alarm data are displayed on the CRT screen of the NC operation panel.

(1) Alarm Type

There are two types of alarm with the VAC II unit. One is detected in the VAC II unit, and the other is detected in the NC.

VAC II Alarms
- 1) Alarms detected in the VAC II unit
  - Power circuit alarms (IOCM, IOCS, OV, UV, etc.)
  - Arithmetic circuit alarms (AD, PAR, LOOP, etc.)
  - Others
- 2) Alarms detected in the NC unit
  - VAC PBU file read alarm
  - VAC start alarm
  - VAC communication alarm
  - Others

(2) Alarm Indication

The VAC II alarm is indicated in the following three places.

1) CRT screen of the NC operation panel

Alarm name and alarm data are displayed.

2) 7-segment LED on the VAC BOARD II

Alarm number is displayed.

3) Single LED on the VAC BOARD II

The LED corresponding to the alarm contents lights up.

Table 4-3

	1) CRT screen on the NC operation panel	2) 7-segment LED on the VAC BOARD II	3) Single LED on the VAC BOARD II
1) Alarms detected in the VAC II unit	○	○	○
2) Alarms detected in the NC unit	○	×	×

Note 1: *"○" indicates "displayed", and "×" indicates "not displayed".*

Note 2: *When more than one alarm occurred, the alarm of the highest level is displayed. When the alarms of the same level occurred, the alarm detected first will be displayed.*

Note the single LEDs corresponding to the alarms occurred will all light up.

Note 3: *For the alarm which occurred after the power to the NC is turned on but before the NC gets ready, "VAC start" is displayed on the CRT.*

In this case, open the NC control box with the NC power ON, and check the alarm contents from the 7-segment LED and the single LED on the VAC BOARD II.

(3) Alarm Contents

1) Alarm indication on the CRT screen of the NC operation panel

Refer to the Alarm and Error List.

2) Alarm indication of the 7-segment LED on the VAC BOARD II

Refer to Table 4-4, "VAC II Alarm List (1/2 - 2/2)".

3) Alarm indication of the single LED on the VAC BOARD II

Refer to Table 4-5, "Failure Operation Status Indication Mode".

Failure contents are detailed in Figs. 4-10 through 4-12.

Table 4-4 VACⅡ Alarm List (1/2)

Alarm No.	Alarm Name	Alarm Level	Reset Level	Processing Level	Contents
1	VAC P.G. count abnormal	1b	2	2 (1) *1	The number of the detected PG counts exceeds the PBU data.
2	VAC motor acceleration rate	1a	1	1	The actual VAC motor speed is too high.
3	VAC APA speed	1b	2	2 (1) *1	The actual spindle speed is too high.
4	VAC CON speed	1b	2	2	Excessive velocity command value in the spindle control mode or excessive feedrate unit amount in the C-axis control mode Excessive feedrate unit amount per communication, or calculation of the CON is delayed from the timing of communication.
5	VAC DIFF overflow	2	3	3	DIFF over occurred in the C-axis control mode.
6	VAC resolver abnormal *2	1a	1	1	The VAC resolver signal is not output.
7	VAC RAM parity error	1a	1	1	Read/write from/to the RAM in the VAC unit cannot be carried out correctly.
8	VAC communication abnormal	1b	2	1	Communication data between the VAC and the OPUS is stopped, or communication data is faulty.
9	VAC instruction command NG.	1b	2	2	The command communicated is undefined or not executable.
10	VAC motor cable overcurrent	1a	1	1	Instantaneous overcurrent in the VAC motor cable
11	VAC inverter bridge short circuit	1a	1	1	Shortcircuit in the VAC inverter bridge arm
12	VAC power trans short circuit	1a	1	1	Overcurrent in the VAC regenerative main circuit
13	VAC power circuit overvoltage	1a	1	1	Excessive DC voltage in the VAC main circuit
14	VAC input voltage drop	1a	1	1	The three-phase input power supply voltage for the VAC is lower than the specified value.
15	VAC phase defect	1a	1	1	Any of the VAC three-phase input is open.
16	VAC arithmetic unit volt drop	1a	1	1	Control power supply voltage on the VAC board is low.

*1 When velocity control by the PG is active

*2 Not effective without a resolver

Table 4-4 VAC Ⅱ Alarm List (2/2)

Alarm No.	Alarm Name	Alarm Level	Reset Level	Processing Level	Contents
17	VAC power circuit low voltage	1a	1	1	DC voltage in the VAC power circuit does not rise.
18	VAC interval loop error	1a	1	1	Interruption can not be performed correctly.
19	VAC motor overload	3	4 (3) *3	4 (3) *3	The temperature inside the VAC motor is higher than the permissible value.
20	VAC heat sink overload	3	4 (3) *3	4 (3) *3	The temperature of the heat sink in the VAC unit is higher than the permissible value.
21	VAC data setting	1b	2	2	The PBU data of the VAC or the on-line change parameter setting is abnormal. (The data outside the data setting range is set or sent.)
22	VAC internal speed command too fast	2	3	3	Excessive velocity command value during velocity control or position control in the VAC
23	VAC magnetic P.G. abnormal	1a	1	2 (1) *1	The magnetic pulse generator is faulty.
24	VAC P.G. marker data NG.	1b	2	2 (1) *1	The number of counts until the first marker is passed after the power has been turned on exceeds the PBU data.
25	VAC cycle overflow error	1a	1	1	A cycle over error occurred with the VAC.
26	VAC watchdog error	1a	1	1	The watch dog timer is not cleared.
27	VAC analog-to-digital access alarm	1a	1	1	A/D access is attempted during A/D conversion.
28	VAC board; CPU error	1a	1	1	A CPU error occurred on the VAC board.
29	VAC card; CPU error	1a	1	1	A CPU error occurred on the VAC card.
30	VAC speed deviation to large	1a	1	1	Excessive VAC motor velocity deviation
31	VAC coil switch	1a	1	1	The winding change-over MS is not turned on.
32	RAM abnormal	1a	1	1	The contents of the RAM cannot be cleared when the power is turned on.

*1 When velocity control by the PG is active

*3 Upgraded to level 3 in 30 seconds after the alarm occurred.

Table 4-5 Failure Operation Status Indication Mode

LED status				Failure Contents	
M1	M2	M3	Lighting LED No.		
Flash-ing	Flash-ing	Un-known (ON/OFF)	1	RES	Resolver alarm
			2	AD	A/D access alarm
			3	PAR	RAM parity error
			4	ACC	Microcomputer access error
			5	LOOP	INT6 loop error
			6	WDOG	Watchdog error
		ON	7	IOCM	Power transistor overcurrent
			8	IOCS	Power transistor short
			9	IOCR	Regeneration unit power transistor short
			10	OV	High voltage
			11	UV	Low voltage
			12	PH	Phase open (loss)
			13	LOSS	Power supply lost at calculation circuit
ON	OFF	OFF	1	OS	Over speed
			2	READ	Speed command read error
			3	UVP	Power circuit low voltage
			4	RAER	RAM error
			5	DSE	DIP switch setting error
			6	DSC	Excessive velocity deviation error
			7	LOOP4	INT4 loop error
			8	LOOP1	INT1 loop error
			9	WCHER	Winding changeover error
OFF	ON		1	OH	Heat sink overheat
			2	OL	Motor overload

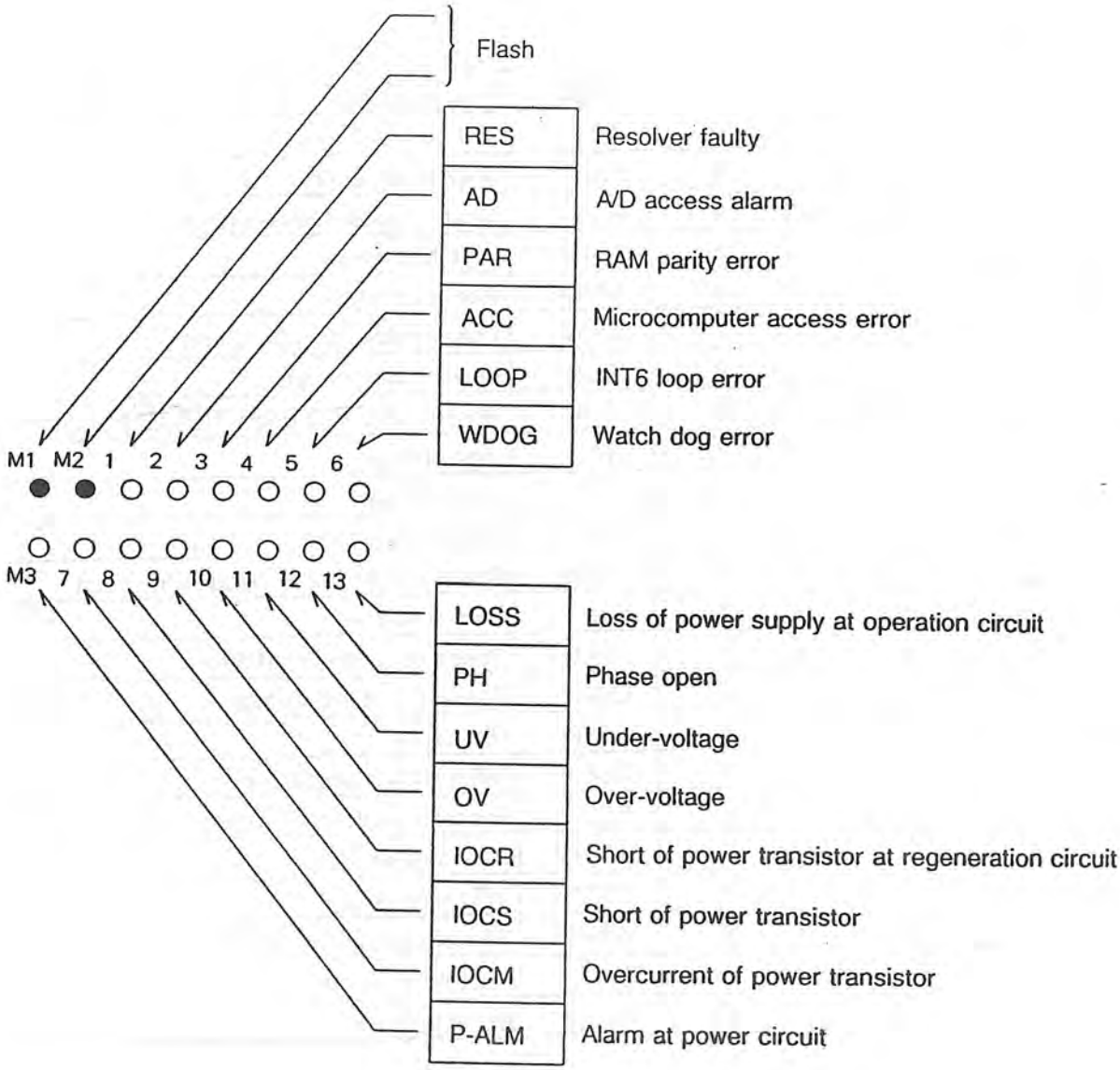

Fig. 4-10 Failure Indication by LED's
(with M1 and M2 LED's flickering)

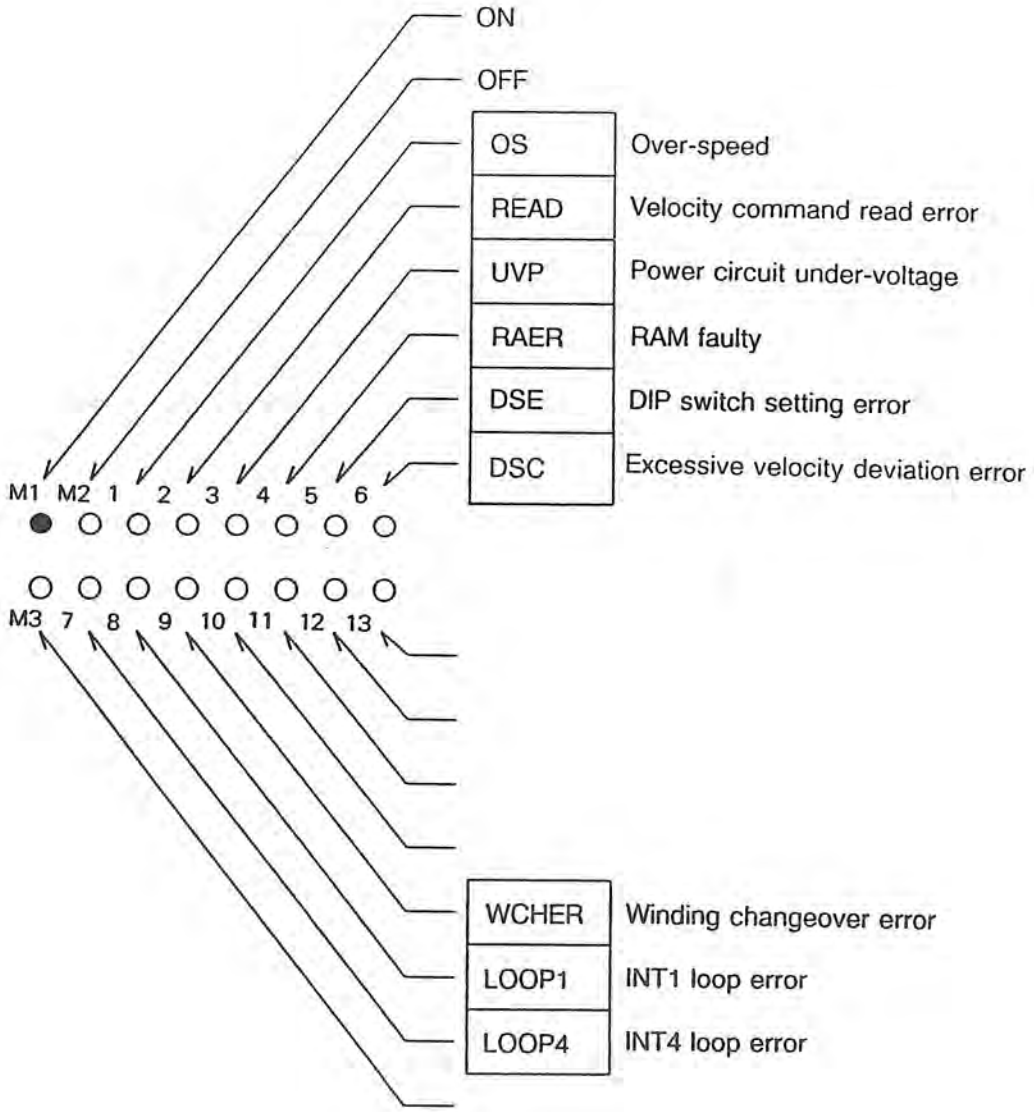

Fig. 4-11 Failure Indication by LED's
(with M1 ON)

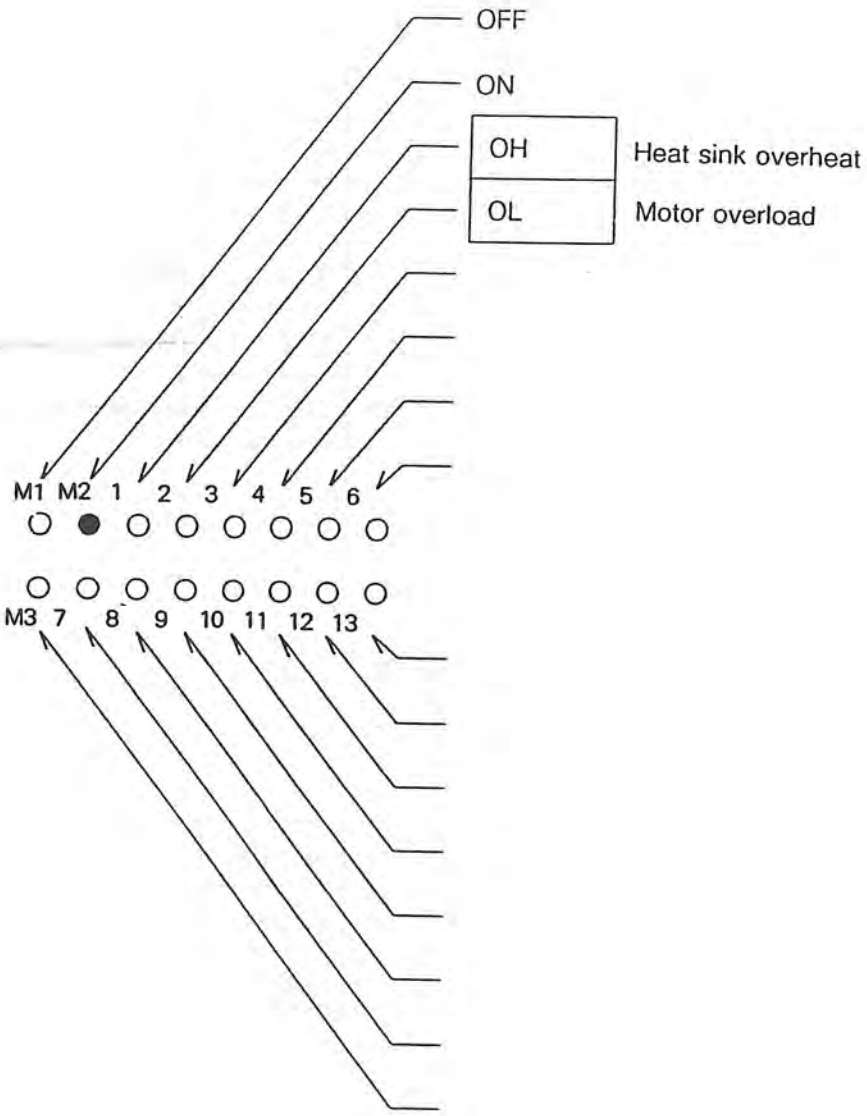

Fig. 4-12 Failure Indication by LED's
(with M2 ON)

5. Troubleshooting

Measures to be taken when a problem has occurred are explained in 5-1. and 5-2, and measures to recover from the failure status are explained in 5-3. Locations of the component parts are shown in 3. "Constructions".

Since high voltage is applied to the VAC drive unit, first record the illuminating LED number(s) and turn off power supply to the VAC drive unit before attempting to touch inside the unit.

5-1. Confirmation of Power Supply and Connectors

Before carrying out the steps explained in 5-2., check the items according to Table 4-6.

Table 4-6 Confirmation of Power Supply and Connectors

Items to Check	How to Check	Measures to Take
Power supply	Measure voltage across input terminals R, S, T of no-fuse breaker and power supply grounding terminal to check if it is within the allowable range. Allowable range: AC 3-phase, 170 V to 240 V, 50/60 Hz, 1%	Correct input power supply so that it is within the allowable range.
Connector	- Make sure that the MR connectors (CN1, 2, 3) are all secured by screws. - For the PCB connectors (CN4 - CN7), make sure that the red mark on the connector guide can be seen at the surface of the connector on the control PCB.	Connect correctly. 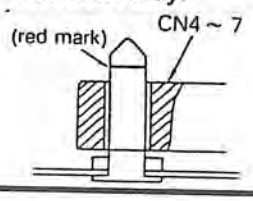

5-2. Trouble and Troubleshooting

If a problem is found, take necessary procedures as indicated in Table 4-7.

Table 4-7 Classification of Failures

Failure	Reference	Failure will lie in	
		Control PCB	Power unit
POWER LED does not light up.	(1)	○	○
LOSS LED lights up.	(1)	○	○
LED's show failure occurrence condition.	(2)	○	○
Motor hunts.	(3)	○	○
Commanded motor speed cannot be obtained.	(4)	○	○
Motor does not rotate.	(4)	○	○
Low cutting performance	(5)	○	
Long acceleration and deceleration time	(6)	○	○
Excessive vibration and noise while the motor is rotating.	(7)	○	○

(1) POWER LED does not light up.

LOSS LED lights up.

Table 4-8

Failure Factor	Check	Measures
Input power supply is abnormal.	See Table 4-6.	See Table 4-6.
Fuse F2, F3, F4 or F5 is blown.	Check whether the fuses have been blown or not. (Refer to 6-2. "Inspection and Replacement Procedure for Fuses".)	Replace blown fuse.
Warning fuse SMP32 or MP50 is blown.	Check whether the fuses have been blown or not. (Refer to 6-2. "Inspection and Replacement Procedure for Fuses".)	Replace blown fuse.
PCB connector CN7 is not inserted properly.	Check to be sure that the red mark on the connector guide can be seen at the surface of the connector on the control PCB.	Insert the connector properly.
Power is not supplied to the control PCB from the power supply unit, or supply voltage is other than 19V AC.	1) Detach the cover. 2) Check voltage across 1 and 3, and 2 and 3 of connector CN7 with a voltmeter voltage must be 19V AC. 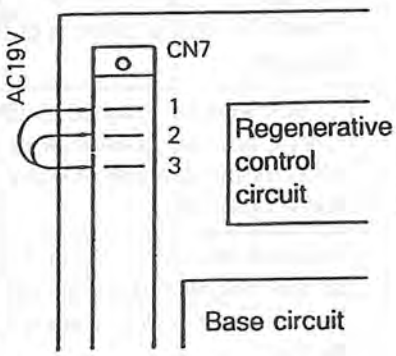 Caution: High voltage is applied to the base circuit and the regeneration circuit.	Replace the power supply unit.
Control PCB is faulty.	Make sure that all the items above are correct.	Replace the control PCB.

(2) LED's show failure occurrence condition.

When LED's show failure occurrence condition, take necessary measures in accordance with the alarm number displayed on the VAC BOARD Ⅱ. For the alarm name and the alarm contents, refer to Table 4-4, "VAC Ⅱ Alarm List".

1) Alarm No. 1 "VAC P.G. count abnormal" is displayed.

Table 4-9

Failure Factor	Check	Measures
The magnetic encoder sensor or the gear is faulty.	Rotate the spindle by hand and check the output signals of the encoder. (Refer to 5-4. "Check Terminals" when checking the output signals.)	Replace the sensor or the gear.
The control PCB (VAC card 1) is faulty.	Make sure that all the items above are correct.	Replace VAC card 1.

2) Alarm No. 2 "VAC motor acceleration rate" is displayed.

Table 4-10

Failure Factor	Check	Measures
The resolver is faulty.	Rotate the resolver by hand and check the output signals. (Refer to 5-4. "Check Terminals" when checking the output signals.)	Replace the VAC motor.
The magnetic encoder sensor or the gear is faulty.	Rotate the spindle by hand and check the output signals of the encoder.	Replace the sensor or the gear.
Loose connection of the connectors of motor signal cables or magnetic encoder signal cables	Check whether connector CN3, CN13, and the connector in the VAC motor terminal box are inserted properly.	Insert them properly.
Broken motor signal cables or magnetic encoder signal cables	Remove the motor signal cables or the magnetic encoder signal cables and conduct the continuity test.	Replace the motor signal cables or the magnetic encoder signal cables.
The control PCB is faulty.	Make sure that all the items above are correct.	Replace the control PCB.

3) Alarm No. 3 "VAC APA speed" is displayed.

Table 4-11

Failure Factor	Check	Measures
The magnetic encoder sensor or the gear is faulty.	Rotate the spindle by hand and check the output signals of the encoder.	Replace the sensor or the gear.
Loose connection of the connector of magnetic encoder signal cables	Check whether connector CN13 is inserted properly.	Insert the connector properly.
Broken magnetic encoder signal cables	Remove the magnetic encoder signal cables and conduct the continuity test.	Replace the magnetic encoder signal cables.
The control PCB is faulty.	Make sure that all the items above are correct.	Replace the control PCB.

4) Alarm No. 4 "VAC CON speed" is displayed.

Table 4-12

Failure Factor	Check	Measures
Faulty NC software	Check the setting value.	Change the setting value.

5) Alarm No. 5 "VAC DIFF overflow" is displayed.

Table 4-13

Failure Factor	Check	Measures
Operation in overloaded condition	Check the cutting conditions. Check the machine for mechanical troubles: lubricating oil, etc.	Change the cutting conditions. Remove the mechanical trouble factor.
The control PCB is faulty.	Make sure that all the items above are correct.	Replace the control PCB.

6) Alarm No. 6 "VAC resolver abnormal" is displayed.

Table 4-14

Failure Factor	Check	Measures
Loose connection of the connectors of motor signal cables	Check whether or not connector CN3 and the connector in the VAC motor terminal box are inserted properly.	Insert them properly.
Broken motor signal cables (Resolver signal)	Remove the motor signal cables and conduct the continuity test.	Replace the motor signal cables.
The control PCB is faulty.	Make sure that all the items above are correct.	Replace the control PCB.
The resolver is faulty.	Make sure that the RES is indicated even after the replacement of the control PCB.	Replace the resolver in the VAC motor.

Note 1: *Normally, resolver resistance measured at the connectors in the VAC motor terminal box is as indicated below.*

Approx. 20 - 25Ω across: S1 - S3, S2 - S4, R1 - R2

Note 2: *Checking Resolver Signals*

Resolver signals can be observed with an oscilloscope after turning on power.

To check them while rotating the motor by hand, do so only while the operation command signals (SFR or SRV) are off or while the machine ready signal (MRDY) is off.

7) Alarm No. 7 "VAC RAM parity error" is displayed.

Replace the control PCB.

8) Alarm No. 8 "VAC communication abnormal" is displayed.

Table 4-15

Failure Factor	Check	Measures
Loose connection of the connectors of optical fiber cables	Check whether or not connectors of optical fiber cables of VAC card 1 are inserted properly.	Insert them properly.
Broken optical fiber cables	Check whether or not optical fiber cables are broken.	Replace the optical fiber cables.
SPC6 (card on the SVP board) on the NC is faulty.	Make sure that all the items above are correct.	Replace SPC6 card.
The control PCB (VAC card 1) is faulty.	Make sure that all the items above are correct.	Replace VAC card 1.

9) Alarm No. 9 "VAC instruction command NG." is displayed.

Table 4-16

Failure Factor	Check	Measures
Faulty NC software (Undefined instruction or non-executable instruction is communicated.)	Check the communication in which an alarm occurs.	Correct the NC software.

10) Alarm No. 10 "VAC motor cable overcurrent" is displayed.

Table 4-17

Failure Factor	Check	Measures
Loose connection of motor power cables at terminal block	Check motor power cable connection at the terminal block of the motor and the VAC drive unit.	Connect the cables securely.
Motor power cables are broken, short-circuited, or grounded.	Disconnect the motor power cables from the VAC drive unit and the motor, and check continuity.	Replace the cables.
Loose connection of the motor signal cables	Check the connectors at the VAC drive unit (CN3) and in the VAC motor terminal box - are they inserted properly?	Insert the connector properly.
The VAC motor is faulty.	Measure resistance between the VAC motor power cable terminal and the frame using a Megger insulation tester.	Replace the VAC motor.
The control PCB is faulty.	Make sure that all the items above are correct. (Check the settings at DIP switches SW3 and SW4.)	Replace the control PCB.
The power supply unit is faulty.	Make sure that the IOCM is indicated even after the replacement of the control PCB.	Replace the power supply unit.

Note: *For the VAC motor of the winding changeover specification, malfunction of the magnet switch for changing winding or magnet switch drive relay must also be checked.*

11) Alarm No. 11 "VAC inverter bridge short circuit" is displayed.

Table 4-18

Failure Factor	Check	Measures
The control PCB or the power supply unit is faulty.	Refer to Table 4-19.	Refer to Table 4-19.
Motor power cables are broken, short-circuited, or grounded.	Disconnect the motor power cables from the VAC drive unit and the motor, and check continuity.	Replace the cables.
The VAC motor is faulty.	Measure resistance between the VAC motor power cable terminal and the frame using Megger insulation tester.	Replace the VAC motor.

Note: *For the VAC motor of the winding changeover specification, malfunction of the magnet switch for changing winding or magnet switch drive relay must also be checked.*

Table 4-19

Process	Contents
1	Turn off power supply.
2	Check the fuses in the TR1 - TR6 base circuits.
3	Check the transistors in the TR1 - TR6 base circuits.
4	Remove the control PCB and check to be sure that the connector pins at the supply unit side of the connector CN5 or CN6 are fixed to the connector. If not pull, the connectors pin up to fix them. 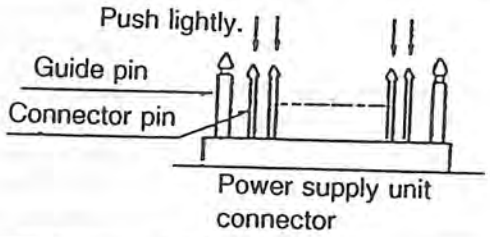
5	Check the transistor modules TRM1 - TRM3.
6	Install the control PCB.
7	Run the VAC drive unit. Check whether the IOCS lamp lights up.
8	If the IOCS lamp lights up again, replace the control PCB and then run the VAC drive unit.
9	If the IOCS lamp still lights up, replace the power supply unit.

12) Alarm No. 12 "VAC power trans short circuit" is displayed.

Table 4-20

Failure Factor	Check	Measures
An instantaneous power failure occurs while the motor is stopped.	Check the power supply.	Reset and restart.
The control PCB or the power supply unit is faulty.	Refer to Table 4-21.	Refer to Table 4-21.

Table 4-21

Process	Contents
1	Turn off power supply.
2	Check the fuses in the TR7 - TR12 base circuits.
3	Check the transistors in the TR7 - TR12 base circuits.
4	Remove the control PCB and check to be sure that the connector pins at the supply unit side of the connector CN6 and CN7 are fixed to the connector.
5	Check the transistor module TRM4 - TRM6.
6	Install the control PCB.
7	Run the VAC drive unit. Check whether the IOCR lamp lights up.
8	If the IOCR lamp lights up again, replace the control PCB and then run the VAC drive unit.
9	If the IOCR lamp still lights up, replace the power supply unit.

13) Alarm No. 13 "VAC power circuit overvoltage" is displayed.

Table 4-22

Failure Factor	Check	Measures
Source voltage is abnormally high.	See Table 4-6.	See Table 4-6.
Power supply cable terminal screws are loose.	1) Turn power supply off. 2) Check the screws if they are loose.	Secure the screws tightly.
The regeneration circuit is faulty.	Follow the steps in Table 4-21 to check if the OV lamp lights up.	See Table 4-21.
Power supply impedance is high.	The OV lamp lights up only while decelerating.	Use a power supply unit with a low impedance.

14) Alarm No. 14 "VAC input voltage drop" or Alarm No. 15 "VAC phase defect"is displayed.

Table 4-23

Failure Factor	Check	Measures
Power supply voltage is low, or one of three phases is open.	See Table 4-6.	See Table 4-6.
The no-fuse breaker is in the OFF position.	Check the no-fuse breaker setting visually.	Set the no-fuse breaker in the ON position.
The no-fuse breaker is tripped.	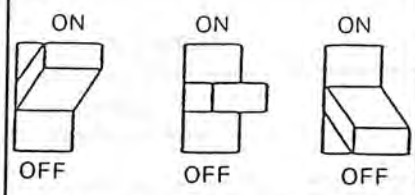 ON status Tripped OFF status No-fuse Breaker Handle Positions	Check the power supply unit following the procedure explained in Table 4-24.
Fuses F5, F6 or F7 is blown.	Check the fuses whether they have been blown or not. Refer to 6. "Fuse Replacement".	Replace blown fuse.
The screws in the diode module is loose.	Check the screws in the diode module. (Refer to Figs. 4-4 through 4-7.)	Secure the screws tightly.
The diode module is faulty.	Check the diode module.	Replace the diode module.
PCB connector CN6 is not plugged in properly.	See Table 4-6.	See Table 4-6.
Control PCB is faulty.	Make sure that all the items above are correct.	Replace the control PCB.
The power supply unit is faulty.	Check to be sure that the UV and/or PH lamp lights up even after the replacement of the control PCB.	Replace the power supply unit.
Power supply impedance is high.	The UV and/or PH lamp lights up only during acceleration and deceleration of the motor.	Use a power supply unit with a low impedance.

Table 4-24 Measures to Take when No-fuse Breaker is Tripped

Process	Contents
1	Turn off power supply.
2	Check the diode module, transistor module TRM4 - TRM6, TR7 - TR12 base circuit fuses, and transistor module. If any other failure state such as IOCM, IOCS and IOCR is indicated at the same time, then take measures for them.
3	Reset the no-fuse breaker handle in the ON position.
4	Run the VAC drive unit.
5	If the no-fuse breaker is tripped again, replace the power supply unit.

15) Alarm No. 16 "VAC arithmetic unit volt drop" is displayed.
Refer to Table 4-8.

16) Alarm No. 17 "VAC power circuit low voltage" is displayed.

Table 4-25

Failure Factor	Check	Measures
Source voltage is low.	See Table 4-6.	See Table 4-6.
The screws in the diode module is loose.	Check the screws in the diode module. (Refer to Figs. 4-4 through 4-7.)	Secure the screw tightly.
The diode module is faulty.	Check the diode module.	Replace the diode module.
PCB connector is not plugged in properly.	See Table 4-6.	See Table 4-6.
The power supply unit is faulty.	Make sure that all the items above are correct.	Replace the power supply unit.
The control PCB is faulty.	The UVP lamp lights up after the replacement of the power supply unit.	Replace the control PCB.

17) Alarm No. 18 "VAC interval loop error" is displayed.
Replace the control PCB.

18) Alarm No. 19 "VAC motor overload" is displayed.

Table 4-26 OL Lamp Lighting up during Motor Rotation

Failure Factor	Check	Measures
Operation in overloaded condition	Check the loaded conditions with the load meter.	Check the cutting conditions and cutting tools.
Fuse F1, F2 or F3 is blown.	Check whether the fuses have been blown or not. (Refer to 6-2. "Inspection and Replacement Procedure for Fuses".)	Replace the fuses.
Loose connection of the fan motor cables at terminal block	The motor cooling fan does not operate when power is turned on. Check fan motor cable connection at the terminal block of the motor and the VAC drive unit.	Connect the cables correctly.
Fan motor cables are broken.	The motor cooling fan does not operate when power is turned on. Check continuity.	Replace the fan motor cables.
Motor cooling fan is faulty.	The motor cooling fan does not operate when power is turned on.	Replace the motor cooling fan.
Motor cooling fan, fan guard, ventilation ports, etc. are contaminated.	Check contamination degree.	Clean with compressed air or using vacuum cleaner.
Control PCB is faulty.	Make sure that all the items above are correct.	Replace the control PCB.

Table 4-27 OL Lamp Lighting Always

Failure Factor	Check	Measures
Loose connection of the motor signal cables	Check the connectors at the VAC drive unit (CN3) and in the VAC motor terminal box - are they inserted properly?	Insert the connector properly.
Broken motor signal cables (Overload signal)	Remove the signal cables and conduct the continuity test.	Replace the signal cables.
The thermostat inside the VAC motor is faulty.	Measure the resistance between thermostat terminals of the connector in the VAC motor terminal box. If it is an infinite value (∞), it indicates that the thermostat is faulty.	Replace the VAC motor.
Control PCB is faulty.	Make sure that all the items above are correct.	Replace the control PCB.

19) Alarm No. 20 "VAC heat sink overload" is displayed.

Table 4-28

Failure Factor	Check	Measures
Fuse F1, F2 or F3 is blown.	Check whether the fuses have been blown or not. (Refer to 6-2. "Inspection and Replacement Procedure for Fuses".)	Replace the blown fuse.
PCB connector CN5 is not inserted properly.	See Table 4-5.	Insert the connector properly.
Heat sink cooling fan is faulty.	Check if the heat sink cooling fan is operating when power is turned on.	Replace the power supply unit.
Heat sink cooling fan and heat sink are contaminated.	Check contaminated condition at the back of the power supply unit.	Clean with compressed air or using vacuum cleaner.
Operation in overloaded condition	Check the loaded conditions with the load meter.	Check the cutting conditions and cutting tools.
Control PCB is faulty.	Make sure that all the items above are correct.	Replace the control PCB.
The power supply unit is faulty.	Make sure that the OH is indicated after the replacement of the control PCB.	Replace the power supply unit.

20) Alarm No. 21 "VAC data setting" is displayed.

Table 4-29

Failure Factor	Check	Measures
Faulty NC software	Check the VAC PBU data or one-line change parameter.	Correct the faulty data.

21) Alarm No. 22 "VAC internal speed command too fast" is displayed.

Table 4-30

Failure Factor	Check	Measures
Mechanical trouble around the spindle (collision, overload, etc.)	Check the machine for the mechanical trouble factor.	Remove the mechanical trouble factor.

22) Alarm No. 23 "VAC magnetic P.G. abnormal" is displayed.

Table 4-31

Failure Factor	Check	Measures
The magnetic encoder sensor is faulty.	Rotate the spindle by hand and check the output signal of the encoder. (Refer to 5-4. "Check Terminals" when checking the output signals.)	Replace the sensor.
Loose connection of the connectors of magnetic encoder signal cables	Check whether connector CN13 is inserted properly.	Insert the connector properly.
Broken magnetic encoder signal cables	Remove the magnetic encoder cables and conduct the continuity test.	Replace the magnetic encoder signal cables.

23) Alarm No. 24 "VAC P.G. marker data NG." is displayed.

Table 4-32

Failure Factor	Check	Measures
The magnetic encoder sensor or the gear is faulty.	Rotate the spindle by hand and check the output signal of the encoder. (Refer to 5-4. "Check Terminals" when checking the output signals.)	Replace the sensor or the gear.

24) Alarm No. 25 "VAC cycle overflow error" is displayed.

Table 4-33

Failure Factor	Check	Measures
Loose connection of the connector between the control PCB's.	Check whether or not the connector between the control PCB's is inserted properly.	Insert them properly.
The control PCB is faulty.	Make sure that all the items above are correct.	Replace the control PCB.

25) Alarm No. 26 "VAC watchdog error" is displayed.
Alarm No. 27 "VAC analog-to-digital access alarm" is displayed.
Alarm No. 28 "VAC board; CPU error" is displayed.
Alarm No. 29 "VAC card; CPU error" is displayed.

Replace the control PCB.

26) Alarm No. 30 "VAC speed deviation to large" is displayed.

Table 4-34

Failure Factor	Check	Measures
Operation in overloaded condition	Check the loaded conditions with the load meter.	Check the cutting conditions and cutting tools.
Open or loose contact of motor power cables	Check the motor power cables.	Connect the motor power cables correctly.
Motor signal cables are faulty. (loose connection, miswiring, etc.)	Check the motor signal cables. To check the resolver signal, refer to Remark 2 for Table 4-14.	Connect the motor signal cables correctly.
The regeneration circuit is faulty.	Check whether DSC lamp lights up during the procedure as explained in Table 4-21.	Check the operation conditions. Are acceleration and deceleration repeated frequently?
The inverter circuit is faulty.	Check whether DSC lamp lights up during the procedure as explained in Table 4-19.	Refer to Table 4-19.
The control PCB is faulty.	Make sure that all the items above are correct.	Replace the control PCB.

Note: *For the VAC motor of the winding change specification, malfunction of the magnet switch for changing winding or magnet switch drive relay must also be checked.*

27) Alarm No. 31 "VAC coil switch" is displayed.

Table 4-35 WCHER Lamp Lighting with Winding Changeover Specification

Failure Factor	Check	Measures
Magnet switch and/or magnet switch drive relay for winding changeover is faulty.	Check the magnet switch.	Replace magnet switch and/or magnet switch drive relay.
The control signal cable is faulty. (broken or loose contact) (magnet switch operation signal, confirmation signal)	Check the cables.	Connect the cables properly.
The control PCB is faulty.	Make sure that all the items above are correct.	Replace the control PCB.

28) Alarm No. 32 "RAM abnormal" is displayed.

Replace the control PCB.

(3) Motor hunts.

Table 4-36

Failure Factor	Check	Measures
Faulty motor power cables and motor signal cables (loose contact, miswiring, etc.)	Check the cables. To check the resolver signal, refer to Remark 2 for Table 4-14.	Connect the cables correctly.
Fuses in TR1 - TR6 base circuits are blown.	Check the fuses in the TR1 - TR6 base circuits. (Refer to 6-2. "Inspection and Replacement Procedure for Fuses".)	Replace blown fuse.
Transistors in TR1 - TR6 base circuits are faulty.	Check the transistors on the TR1 - TR6 base circuits.	Replace the control PCB.
Transistor modules TRM1 - TRM3 are faulty.	Check the transistor module TRM1 - TRM3.	Replace the transistor module.
Control PCB is faulty.	Make sure that all the items above are correct.	Replace the control PCB.

Note: *With the VAC motor winding change specification, the motor power cables are wired through the winding change magnet switch. Therefore, the possibility of loose contact, wiring error, etc. related with the magnet switch for changing winding must also be checked.*

(4) Commanded motor speed cannot be obtained.

Motor does not rotate.

Table 4-37

Failure Factor	Check	Measures
The VAC drive unit is faulty.	When a rotation command is given, the LED's light up indicating the faulty operation condition.	See Table 4-9.
Broken or loose contact of the motor signal cables and power cables	Check the motor signal and power cables.	Connect the cables correctly.
The resolver is faulty.	To confirm the resolver signal, refer to Remark 2 on Table 4-14.	Replace the VAC motor.
The magnetic encoder is faulty.	Check the output signal of the encoder.	Replace the sensor of the encoder.
Control PCB is faulty.	Make sure that all the items above are correct.	Replace the control PCB.
The power supply unit is faulty.	Make sure that all the items above are correct.	Replace the power supply unit.
Winding changeover signal WCHG does not correctly input.	Check if the winding changeover signal WCHG input correctly or not by LED's indication. (Note) (Refer to Fig. 4-9.)	Input the signal correctly.
Winding changeover magnet switch and/or magnet switch drive relay is faulty.	Refer to the maintenance manual for the machine.	Refer to the maintenance manual for the machine.

Note: *With the winding changeover specification, motor speed range varies according to the selected winding.*

High-speed winding : 0 - max. motor rpm
Low-speed winding : 0 - max. motor rpm in low-speed range

If a motor speed exceeding max. rpm in the low-speed range is specified while the low-speed winding is selected, the motor rotates at the max. speed in the low-speed range.

(5) Low cutting performance

Table 4-38

Failure Factor	Check	Measures
Torque limit command is provided.	Check the signal existing. See TLM in Fig. 4-9.	Clear the torque limit command.
Problem lies with the machine spindle.	Refer to the maintenance manual for the machine.	Refer to the maintenance manual for the machine.
Control PCB is faulty.	Make sure that all the items above are correct.	Replace the control PCB.

(6) Long acceleration and deceleration time

Table 4-39

Failure Factor	Check	Measures
Operation in overloaded condition	Check the loaded conditions with the load meter.	Reduce load.
Torque limit command is provided.	Check the signal existing. See TLM in Fig. 4-9.	Clear the torque limit command.
Source voltage is high.	See Table 4-6.	See Table 4-6.
Broken or loose contact of motor power cables	Check the motor power cables.	Connect the motor power cables correctly.
Fuses in base circuits are blown.	Check the fuses in base circuits. (Refer to 6-2. "Inspection and Replacement Procedure for Fuses".)	Replace blown fuse.
Transistors in the base circuits are faulty.	Check the transistors in the base circuits.	Replace the control PCB.
Transistor module is faulty.	Check the transistor module.	Replace the transistor module.
Control PCB is faulty.	Make sure that all the items above are correct.	Replace the control PCB.
Power supply impedance is high.	Only deceleration period is elongated.	Use a power supply unit with a low impedance.

(7) Excessive vibration and noise while the motor is rotating.

Table 4-40

Failure Factor	Check	Measures
Motor installation is loose; coupling with the spindle is loose.	Check motor installation or motor coupling to spindle.	Install the motor correctly.
VAC drive unit or connection of cables is faulty.	Refer to Table 4-36.	Refer to Table 4-36.
VAC motor is faulty.	Make sure that all the items above are correct.	Replace the VAC motor.

Note: *To determine the cause of the problem, run the VAC motor freely. For this, follow the procedure below.*

1) Start the VAC motor.

2) Trip the no-fuse breaker in the VAC drive unit to OFF.

3) The PH (phase-loss) alarm occurs and the VAC motor runs freely.

5-3. Recovery from Failure Status

When LED's indicate the faulty operation status, it is necessary to remove the cause of failure first and then reset the alarm state to recover the operations of the VAC drive unit.

VAC alarms are classified into the following four levels according to the operation at their occurrence and the way to reset them. Refer to Table 4-4, "VAC II Alarm List".

Table 4-42

Alarm Level	Operation at Occurrence	How to Reset	Nature of Alarm
Level 1a	Transited to alarm level 1 (immediate power shutoff)	Set the three-phase breaker to the "OFF" position and then set it to the "ON" position again.	VAC hardware must be initialized. (for example exception alarm)
Level 1b	Transited to alarm level 1 (power shutoff after the motor is stopped.)	Turn off the power to the NC once and then turn it on again.	Parameters must be initialized. (for example DIFF OVER alarm)
Level 2	Transited to the alarm state in the mode in which the alarm occurred. (Operation varies depending on the mode in which the alarm occurred.)	Reset the NC from the operation panel. (The reset command is generated in each mode.)	Alarms which might be caused by cutting conditions.
Level 3	The VAC sends information to the NC that an alarm of level 3 has occurred. The VAC unit operates for 30 seconds after the alarm occurred, then the alarm level is transited to "2".	Reset the NC from the operation panel. (The reset command is generated in each mode.)	Overload-related alarms

5-4. Check Terminals

For the layout of the check terminals, refer to Fig. 4-2.

Table 4-43

Check Terminal	Probe Common Terminal	Contents	Remarks
GND	–	Separated from the regenerative control circuit, the input/output signal circuit, and the base circuit.	
S1	GND	Resolver excitation signal Sine wave 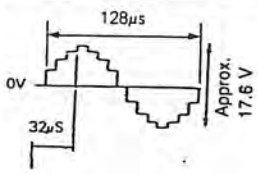	
S2	GND	Resolver excitation signal Cosine wave 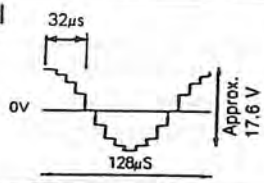	
R1	GND	Resolver feedback signal 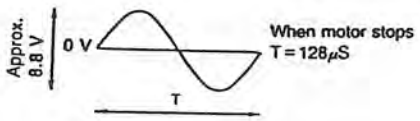 - Phase difference to the excitation signal changes as the motor rotates. - Frequency f (Hz) varies as indicated below according to the motor speed N (rpm). $f = 1/T = \frac{1}{128 \times 10^{-6}} \pm \frac{8N}{60}$ (+ in the forward rotation and – in the reverse rotation)	
VEL	GND	Velocity monitor The motor speed (rpm) is indicated. ±10 [V] at the maximum motor speed	
TQ	GND	Torque monitor The motor output torque is indicated. ±10 [V] at the maximum motor output	

Check Terminal	Probe Common Terminal	Contents	Remarks
Is	GND	Inverter circuit current detection	The IOCS alarm occurs at higher than 250 [mV].
Ir	GND	Regenerative circuit current detection	The IOCR alarm occurs at higher than 250 [mV].
Iu	GND	U-phase current feedback signal 0(V) 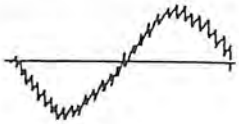	
Iv	GND	V-phase current feedback signal Cycle and amplitude changes depending on operation state.	
IM	GND	Current feedback three-phase full wave rectifying signal 0(V) 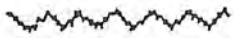 - Cycle and amplitude changes depending on operation state. - With the type A control PCB, the current feedback signal is rectified to negative voltage. - With the previous control PCB, the current feedback signal is rectified to positive voltage.	The IOCR alarm occurs at lower than −6.6 V.
Iuc	GND	U-phase current feedback signal 0(V) 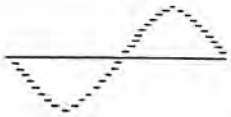	
Ivc	GND	V-phase current feedback signal Cycle and amplitude changes depending on operation state.	
Idu	GND	U-phase current amplifier signal 0(V)	
Idv	GND	V-phase current amplifier signal Cycle and amplitude changes depending on operation state.	

Check Terminal	Probe Common Terminal	Contents	Remarks
Euc	GND	U-phase induced voltage command signal 0(V) 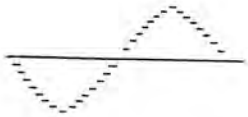	
Evc	GND	V-phase induced voltage command signal Cycle changes depending on the motor speed.	
MON	GND		
+5 V	GND	Control circuit power voltage	
+15 V	GND	Control circuit power voltage	
−15 V	GND	Control circuit power voltage	
COM	–	Grounding in regenerative control circuit When checking the waveform in the regenerative circuit, use an insulated oscilloscope. Be careful that the COM terminal is not short-circuited with other circuit, for example with the GND terminal, in the oscilloscope.	
6V	COM	Regenerative control circuit power voltage	

Check Terminal	Probe Common Terminal	Contents	Remarks
A B Z	GND GND GND	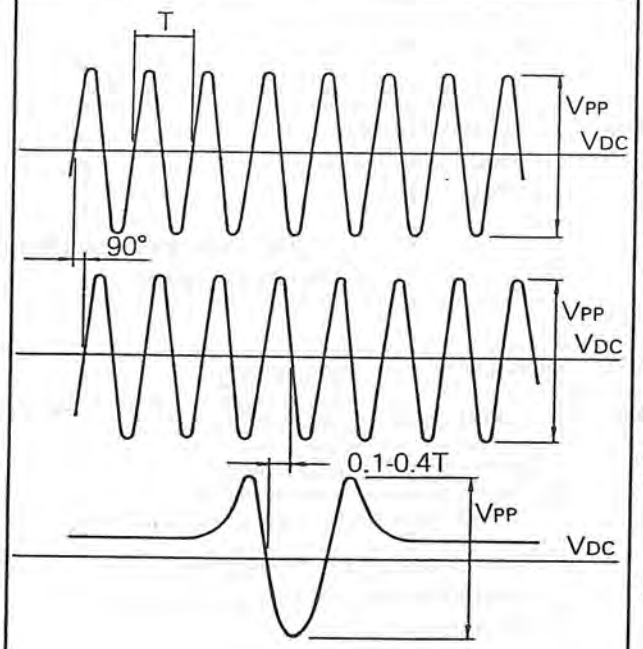 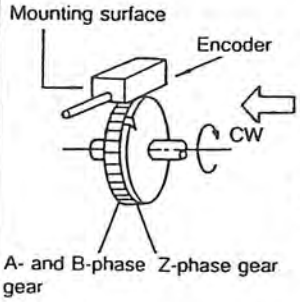 The above waveforms are obtained when the encoder is installed as illustrated to the left and the gear is rotated in the CW direction viewing it from the Z-phase gear teeth.	T is determined on the basis of the number of gear teeth and the speed. Z: Number of gear teeth N: Speed (rpm) $T = \frac{1}{N \times 1/60 \times Z}$ (sec) Amplitude at A and B: V_{DC} = 2.5 V Vpp = 3 V Amplitude at Z: V_{DC} = 2.5 V Vpp = 3 V

6. Fuse Replacement

6-1. Fuse Blown Condition

Blown conditions of fuses used in the VAC drive unit are shown in Table 4-44.

Table 4-44 Fuse Blown Conditions

Fuse Name	Blown Condition
Fuses F1 - F6 (A type motor) F1 - F4 (former type motor) After slight modification of D22 Excluding D22A	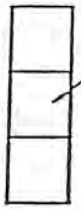 The neon lamp lights up as illustrated at the left when viewed from the front. (only when power is ON.)
Fuses F1 - F7 (D22A) F1 - F5 (After slight modification of D22)	 The fuse element is blown as illustrated at the left when viewed from the front.
Warning fuse SMP32 MP50	 The white fuse blown indication appears at upper portion of the fuse cartridge when viewed from the front.
Base circuit fuse KM10	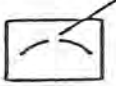 The fuse element is blown as illustrated at the left when viewed from the front. There might be cases where the blown fuse element cannot be found visually.

6-2. Inspection and Replacement Procedure for Fuses

(1) Fuses F1 - F6
(After slight modification of D22, excluding D22A)

1) Preparation

D3, D6, D8:

Turn off power supply, then open the power supply unit door after removing the door clamping screws.

D11, D22:

Follow the procedure explained below when power is off or after turning it off if fuse blown indication is provided.

2) Grip the fuse holder knob and pull out the fuse holder assembly.

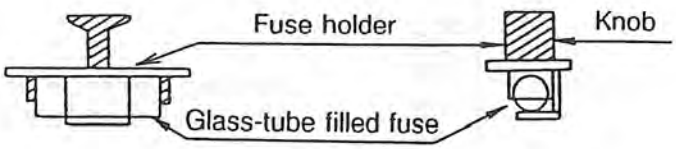

Fig. 4-13 Fuse and Fuse Holder

3) Measure resistance across the glass-tube filled fuse element using a multimeter. Reading must be 0Ω. When it is "∞" it indicates that the fuse has been blown.

4) If the fuse is blown, replace the fuse. Refer to 6-3. "Fuse Rating".

5) Set the fuse holder.

6) For D3, D6 and D8, close the door and fix it in place with screws.

(2) Fuses F1 - F7
(After slight modification of D22, for D22A only)

1) Turn off power supply.
2) Remove the fuse cover using a screwdriver.
3) Remove the glass-tube filled fuse element using a screwdriver.
4) Measure resistance across the glass-tube filled fuse element using a multimeter.
   Reading must be 0Ω. When it is "∞", it indicates that the fuse has been blown.
5) If the fuse is blown, replace the fuse.
6) Set the fuse holder. Refer to 6-3. "Fuse Rating".
7) Place the fuse cover.

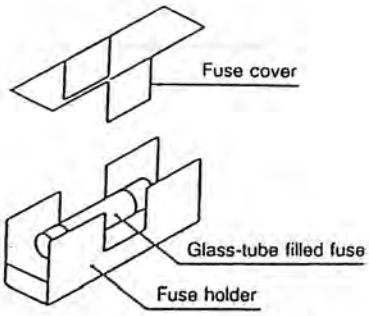

Fig. 4-14 Fuse for D22

(3) Warning Fuse SMP32, MP50, and Base Circuit Fuse KM10

1) Loosen the screws and remove the cover.
2) Check the fuse.
   Warning fuse:
   Visually check the blown indication.
   Base circuit fuse:
   After removing the fuse, measure resistance between the terminals using a multi-meter.
   In either case, reading must be 0Ω. When it is "∞", it indicates that the fuse has been blown.

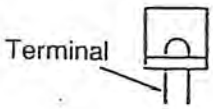

Fig. 4-15 KM10

3) Remove the blown fuse and set a new fuse in the holder.
4) Place the cover and secure the screws.

6-3. Fuse Rating

For fuses F1 - F7 in the A type unit, use 5 A and 0.5 A rating fuses as indicated in Table 4-45. When replacing a fuse, always use the one with the same current rating.

Fuses used in the former type unit are all 5 A rating fuses.

Table 4-45 A Type Unit Fuse Current Rating

Unit Type	Fuse Rating (A)							Remark
	F1	F2	F3	F4	F5	F6	F7	
D6A, D8A, D11A	5	5	5	5	0.5	0.5	-	Only for power units of Ver.1.0, all fuses were 5 A rating.
D22A	5	5	5	5	5	0.5	0.5	Only for power units of Ver.1.0, all fuses were 5 A rating.

7. Spare Parts

The VAC drive units have the following spare parts as indicated in Table 4-46.

Table 4-46 Spare Parts

Fuse Name	Type	Parts No.	Q'ty
Fuse (F1, F2, F3, F4, F5)	200 V, 5 A, F7161	E2442-290-124	2
Warning fuse (SMP32)	SMP32, 3.2 A Daito tsushin	E2445-392-228	2
Warning fuse (MP50)	MP50, 5A Daito tsushin	E2445-392-215	1

SECTION 5 SELF-DIAGNOSTICS

The OSP5020M/OSP500M-G is a sophisticated CNC system that is designed to make the most of its built-in computer capabilities. The self-diagnostic function is one of the advantages a computerized numerical control system can provide. This function is classified into the following four items:

(1) Check Function by Alarm Display and Error Display

This function constantly monitors any defect including programming, operational errors and NC malfunctions.

When any defect such as the programming error and NC malfunction requiring stop of the machine operation occurs, the ALARM lamp goes on, the machine is brought to a stop, and the contents of the alarm will be displayed on the CRT. When the defect is an operational error in editing operation, etc. not requiring the machine to be stopped, the ALARM lamp does not go on, but the contents of the error only will be displayed on the CRT. From these displays, the contents of the defect can be judged.

(2) Check Function by Check Data Display

With check data displayed on the CRT, it is possible to check internal conditions of the CNC, input/output signals of the NC and so on. This is a useful function to adjust and check the CNC.

(3) Check Function by CNC Diagnostic Display

This is the function to constantly monitor the memory in the CNC in the display form of decimal numbers, hexadecimal numbers, floating-point number, bit-string, etc.

(4) Check Function by Machine Diagnostic Display

When the machine does not operate because of any of the requirements for the operation of the machine not fulfilled, that unfulfilled condition will be displayed in characters to facilitate operator's inspection work.

1. Alarm Display and Error Display

The CNC constantly monitors the operating conditions of the machine, the program data and the operation of the machine operator. When any defect takes place, it gives the operator a warning by displaying an alarm message or error message.

Alarm Display ..... The machine is stopped. The ALARM lamp under NC STATUS goes on. The corresponding alarm message is displayed on the 2nd line of the CRT.

Error Display ..... Mainly warning against any of the items input by the operator, and does not cause the machine to be stopped.

The ALARM lamp does not go on and the error message is displayed on the 19th to 22nd line on the CRT.

CPU Alarm ..... This alarm indicates CPU malfunction. When this type of alarm occurs, machine operation cannot be resumed until power supply is turned on again. Naturally, the machine instantly stops.

When the CPU does not function normally, the message is displayed below the central portion on the CRT.

Note: *Refer to the separately attached manual, "Alarm & Error List for OSP5020M".*

2. Check Data Display

The CNC constantly monitors internal conditions of the CNC and input/output signals of the NC, and the operator can see these data through check data displayed on the CRT.

Check data displayed on the CRT and its contents are shown in the following display screens.

Operation procedures for check data display are as follows:

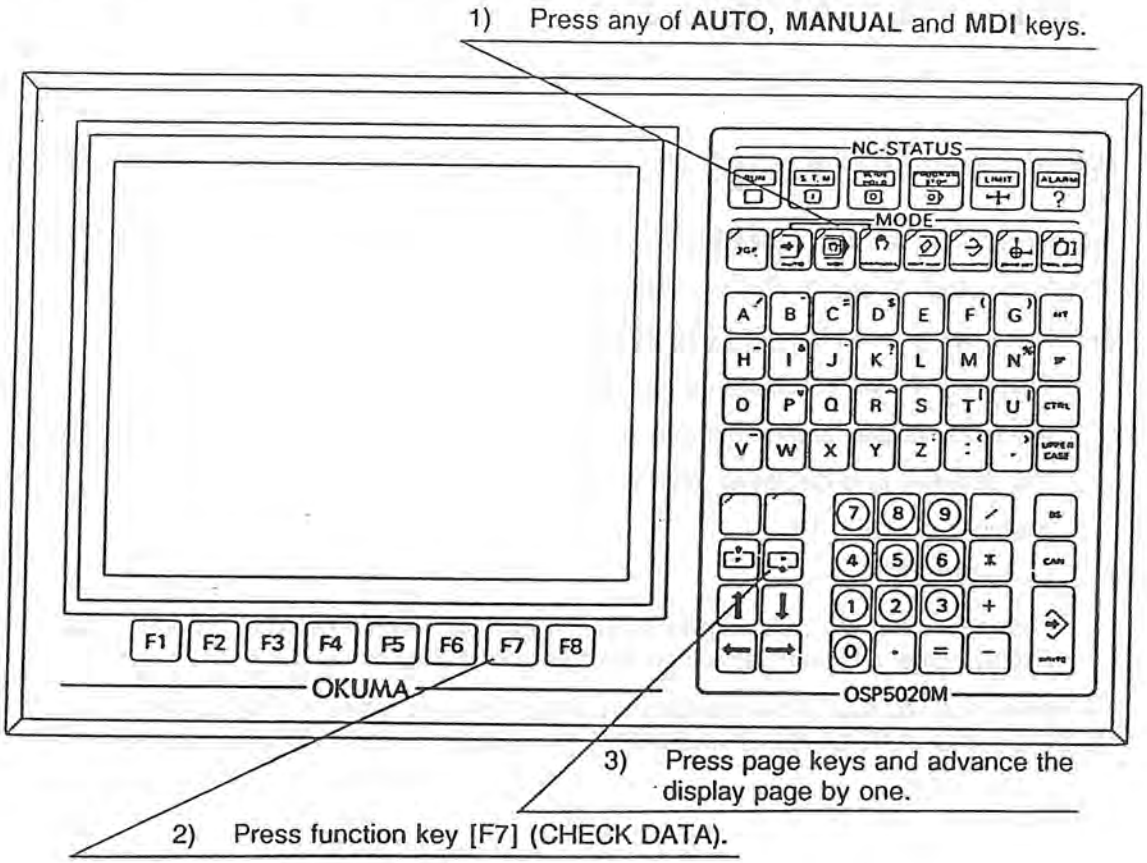

1) Press any of **AUTO, MANUAL** and **MDI** keys.

The function keys are assigned the same functions for [F2] through [F7]. Functions available with function key [F1] depends on the mode selected:

```
=CH
=
PROGRAM | ACTUAL | PART    | BLOCK   | SEARCH |        | CHECK   | [EXTEND]
SELECT  | POSIT. | PROGRAM | DATA    |        |        | DATA    |
[F1]    [F2]     [F3]      [F4]      [F5]     [F6]     [F7]      [F8]
```

AUTO ..... PROGRAM SELECT
MDI ..... DATA INPUT
MANUAL ..... None

2) Press function key [F7] (CHECK DATA).

   The displays the check display screen.

3) Press page keys [P↑] and [P↓] until the desired display screen is obtained.

   [P↓] advances the display screen by one.

   [P↑] returns the display screen by one.

Note that required display screen can be accessed using the search command instead of using page keys.

Procedure to display the required display screen using the search command is as follows:

First follow steps 1) and 2) above to select the check display screen display mode.

4) Press the function key [F5] (SEARCH).

   Prompt "=F" will be displayed on the console line.

5) Key in the display screen number of the required display screen through the keyboard.

   The data key-in is displayed following "=F__".

   Example: =F__10

6) Press **WRITE** key.

   The required check data display screen will be displayed. The data accessed on the check data display screens is summarized on the following display screens.

On display screens that follow provided are the check data tables of PANEL INPUT, PANEL OUTPUT, NC INPUT, NC OUTPUT, MACHINE INPUT and MACHINE OUTPUT which are often used.

(1) Panel Input

On the "CHECK DATA *PANEL INPUT*" display screens, the on/off status of individual switches on the machine operation panel are displayed. Provided on the following display screens are the CRT display and corresponding signal names. The numerals, a combination of 0s and 1s, at the left side of the CRT signify the on/off status of the corresponding switches.

1 ..... Switch ON (normal state for contact "B"*)

0 ..... Switch OFF (active state for contact "B"*)

* Contact "B" represents normally close contact.

Panel Input

```
AUTO OPERATION                                   N        0

CHECK DATA          *PANEL INPUT*          PAGE  1    1mm

  NO.   data        bit7 bit6 bit5 bit4 bit3 bit2 bit1 bit0
   1   00000000-00  CRTF JOGP JGF  JOGN RSTR      SP2  RST
   2   00000000-00  RPDP RPDN PH   5AXS 4AXS ZAXS YAXS XAXS
   3   00000000-00  PHAD MINT OPST SBLK SSTP BLS3 BLS2 BLS1
   4   00000000-00  ITLK MLOK DRYR STML ZLOK MRIZ MRIY MRIX
   5   00000000-00  MRI4 SP4  CHPC SORT SNTR SSP  SCOW SCW
   6   00000000-00  COL  WAN  WAA  LGHT LUBE OLM  OHH  OHL
   7   00000000-00  ILKR CYST RTCY STAV STRW ATC  APC  SP3
   8   10111110-BE  JOV7 JOV6 JOV5 JOV4 JOV3 JOV2 JOV1 JOV0
   9   01010101-55  SOV3 SOV2 SOV1 SOV4 ROV3 ROV2 ROV1 ROV0
  10   00001101-0D                 FOV4 FOV3 FOV2 FOV1 FOV0
  11   00000100-04  PNPP PNIP PSV  PH6  6AXS NTS1 NSTR
  12   00000000-00  PH50 PH10 PH1  PH5  PH4  PHZ  PHY  PHX

*CH
-
PROGRAM SELECT | ACTUAL POSIT. | PART PROGRAM | BLOCK DATA | SEARCH | ATC/APC | CHECK DATA | [EXTEND]

F1 F2 F3 F4 F5 F6 F7 F8
```

No. \ bit	bit 7	bit 6	bit 5	bit 4	bit 3	bit 2	bit 1	bit 0	Connector	Interface
1	CRT display OFF	Cutting feed (+)	Cutting feed OFF	Cutting feed (−)	Sequence restart			NC reset	CN-P-2	Common panel PANEX CARD5
2	Rapid feed (+)	Rapid feed (−)	Pulse handle	← Axis select → 5th	4th	Z	Y	X		
3	Pulse handle overlap	Manual intervention	Optional stop	Single block	Cycle stop	Block skip 3	Block skip 2	Block skip 1		
4	Interlock release	Machine lock	Dry run	STM lock	Axis com. cancel	Mirror image Z	Mirror image Y	Mirror image X		
5	Mirror image 4		Chip conveyor	← Spindle → Orientation	Release	Stop	CCW	CW	CN-P-3	
6	Coolant	Chip air blower nozzle	Chip air blower adaptor	Work light	Slideway lubrication	Oil mist	Through-the-tool coolant	Shower cleaning		
7	← Interlock release	1 cycle start	Return cycle	← ATC → 1 step advance	1 step reverse	ATC	APC			
8	← Manual cutting feed selection (Note) →									
9	← Spindle speed override (See Table 5-2.) →				← Rapid traverse override (See Table 5-1.) →				CN-P-4	
10				← Cutting feed override (See Table 5-3.) →					CN-P-5	
11	NC panel limited use	NC panel disabled	Power save	Axis select for pulse handle 6th	Axis select for manual feed 6th	NC slide hold	NC cycle start		CN-PA5-3	
12	← P.H. multiplication ratio → ×100	×50	×10	← Axis select for pulse handle → 5th	4th	Z	Y	X		

( ) indicates circuit symbol.
*( ) indicates B-contact.
·( ) indicates unit name.

Note: *Manual cutting feedrate and F1-digit feedrate are determined in accordance with 256 step gray code.*

Panel Input

```
AUTO OPERATION                                    N        0

CHECK DATA          *PANEL INPUT*          PAGE   2    1mm

    NO.   data        bit7 bit6 bit5 bit4 bit3 bit2 bit1 bit0
    13   00100000-20  DNCB DNC  IGF2 IGF1 IGF0 TUPB TCPB TCRP
    14   00000000-00                           RELS WKED
    15   00000000-00  F17  F16  F15  F14  F13  F12  F11  F10
    16   00000000-00  F27  F26  F25  F24  F23  F22  F21  F20
    17   00000000-00  F37  F36  F35  F34  F33  F32  F31  F30
    18   00000000-00  F47  F46  F45  F44  F43  F42  F41  F40
    19   00000000-00  F57  F56  F55  F54  F53  F52  F51  F50
    20   00000000-00  F67  F66  F65  F64  F63  F62  F61  F60
    21   00000000-00  F77  F76  F75  F74  F73  F72  F71  F70
    22   00000000-00  F87  F86  F85  F84  F83  F82  F81  F80
    23   00000000-00
    24   00000000-00

=CH
=
PROGRAM | ACTUAL | PART | BLOCK | | | CHECK | |
SELECT  | POSIT. | PROGRAM | DATA | SEARCH | ATC/APC | DATA | [EXTEND]

F1 F2 F3 F4 F5 F6 F7 F8
```

No. \ bit	bit 7	bit 6	bit 5	bit 4	bit 3	bit 2	bit 1	bit 0	Connector	Interface
13	DNC buffer operation	DNC communication ON	← IGF status → 2	1	0	Tool in spindle unclamp	Tool in spindle clamp	Tool change cycle	CN-PA5-3	PANEX CARD5
14										
15	← F1 digit feed F1 (Note) →								CN-PA2-1	PANEX CARD2A
16	← F1 digit feed F2 →									
17	← F1 digit feed F3 →									
18	← F1 digit feed F4 →									
19	← F1 digit feed F5 →								CN-PA2-2	
20	← F1 digit feed F6 →									
21	← F1 digit feed F7 →									
22	← F1 digit feed F8 →									
23										
24										

Table 5-1 Rapid Feedrate Override

bit / Rapid Feedrate Override	ROV3	ROV2	ROV1	ROV0
0%	0	0	0	1
1%	0	0	1	0
5%	0	0	1	1
10%	0	1	0	0
30%	0	1	0	1
50%	0	1	1	0
70%	0	1	1	1
80%	1	0	0	0
90%	1	0	0	1
100%	1	0	1	0

5%	0	0	1	0
10%	0	1	1	0
50%	0	1	1	1
100%	0	1	0	1

Table 5-2 Spindle Speed Override

bit / Spindle Speed Override	SOV3	SOV2	SOV1	SOV0
50%	0	0	0	1
70%	0	0	1	0
80%	0	0	1	1
90%	0	1	0	0
100%	0	1	0	1
110%	0	1	1	0
120%	0	1	1	1
130%	1	0	0	0
140%	1	0	0	1
150%	1	0	1	0
160%	1	0	1	1
180%	1	1	0	0
200%	1	1	0	1

Table 5-3 Cutting Feedrate Override

bit / Cutting Feedrate Override	FOV4	FOV3	FOV2	FOV1	FOV0
0%	0	0	0	0	1
5%	0	0	0	1	0
10%	0	0	0	1	1
20%	0	0	1	0	0
30%	0	0	1	0	1
40%	0	0	1	1	0
50%	0	0	1	1	1
60%	0	1	0	0	0
70%	0	1	0	0	1
80%	0	1	0	1	0
90%	0	1	0	1	1
95%	0	1	1	0	0
100%	0	1	1	0	1
105%	0	1	1	1	0
110%	0	1	1	1	1
120%	1	0	0	0	0
130%	1	0	0	0	1
140%	1	0	0	1	0
150%	1	0	0	1	1
160%	1	0	1	0	0
170%	1	0	1	0	1
180%	1	0	1	1	0
200%	1	0	1	1	1

(2) Panel Output

On the "CHECK DATA *PANEL OUTPUT*" display screens, the on/off status of individual indicating lamps on the machine operation panel are displayed. Provided on the following display screens are the CRT display and corresponding signal names. The numerals, a combination of 0s and 1s, at the left side of the CRT signify the on/off status of the corresponding output signals.

1 ..... Output signal ON

2 ..... Output signal OFF

Panel Output

```
AUTO OPERATION                                   N        0

CHECK DATA          *PANEL OUTPUT*          PAGE  5    1mm

   NO.   data        bit7 bit6 bit5 bit4 bit3 bit2 bit1 bit0
    1   00000000-00  ILCL MLKL DRYL SLKL ZLKL MRZL MRYL MRXL
    2   00000000-00  MR4L SP4L SP2L CHPL ORTL NTRL COWL SOWL
    3   00000000-00  COLL WANL WAAL LGHL LUBL OLML OHLL OHHL
    4   00000000-00
    5   00000000-00
    6   00000000-00
    7   00000000-00
    8   00000000-00
    9   00000000-00  JGPL JGNL PHL  5AXL 4AXL ZAXL YAXL XAXL
   10   00000100-04  CRTL 1CYL RTCL 1SAL 1SRL ATCL APCL SP3L
   11   00000003-00  PHAL MINL OSPL SBLL SSTL BS3L BS2L BS1L
   12   00000110-06  DNBL DNCL PSVL      6AXL SPRL SPOL TCPL

-CH
-
PROGRAM SELECT | ACTUAL POSIT. | PART PROGRAM | BLOCK DATA | SEARCH | ATC/APC | CHECK DATA | [EXTEND]
F1 F2 F3 F4 F5 F6 F7 F8
```

No. \ bit	bit 7	bit 6	bit 5	bit 4	bit 3	bit 2	bit 1	bit 0	Connector	Interface
1	Interlock release	Machine lock	Dry run	STM lock	Axis com. cancel	Mirror image Z	Mirror image Y	Mirror image X	CN-P-8	Common panel
2	Mirror image 4			Chip conveyor	← Spindle →					
					Orientation	Release	CCW	CW		
3	Coolant	Chip air blower nozzle	Chip air blower adaptor	Work light	Slideway lubrication	Oil mist	Through-the-tool coolant	Shower cleaning		
4										
5										
6										
7										
8										
9	Cutting feed (+)	Cutting feed (−)	Pulse handle	← Axis select →					CN-PA5-2	PANEX CARDS
				5th	4th	Z	Y	X		
10	CRT display OFF	← ATC →								
		1 cycle start	Return cycle	1 step advance	1 step reverse	ATC	APC			
11	Pulse handle overlap	Manual intervention	Optional stop	Single block	Cycle stop	Block skip 3	Block skip 2	Block skip 1		
12	DNC buffer operation	DNC communication ON	Power save		Axis select 6th	Tool in spindle unclamp	Tool in spindle clamp	Tool change cycle		

Panel Output

```
AUTO OPERATION                                   N        0

CHECK DATA          *PANEL OUTPUT*          PAGE  6    1mm

     NO.    data        bit7 bit6 bit5 bit4 bit3 bit2 bit1 bit0
     13   00000000=00   F8L  F7L  F6L  F5L  F4L  F3L  F2L  F1L
     14   00000000=00
     15   00000000=00
     16   00000100=04                                IPTL IPRL IGPL
     17   00000000=00
     18   00000000=00
     19   00000000=00
     20   00000000=00
     21   00000000=00
     22   00000000=00
     23   00000000=00
     24   00000000=00

=CH
=
PROGRAM SELECT | ACTUAL POSIT. | PART PROGRAM | BLOCK DATA | SEARCH | ATC/APC | CHECK DATA | [EXTEND]
```

F1 F2 F3 F4 F5 F6 F7 F8

No. \ bit	bit 7	bit 6	bit 5	bit 4	bit 3	bit 2	bit 1	bit 0	Connector	Interface
13	←			<F1-digit feed>				→	CN-PA5-2	PANEX CARD5
	F8	F7	F6	F5	F4	F3	F2	F1		
14										
15										
16										
17						IGF panel initialization finished	IGF program transmission request	IGF panel switching		
18										
19										
20										
21										
22										
23										
24										

(3) NC Input

On the "CHECK DATA *NC INPUT*" display screens, the on/off status of individual input signals to the NC processor are displayed. Provided on the following display screens are the CRT display and corresponding signal names. The numerals, a combination of 0s and 1s, at the left side of the CRT signify the on/off status of the corresponding input signals.

1 ..... Input signal ON

2 ..... Input signal OFF

NC Input

```
AUTO OPERATION                                  O    N        1

CHECK DATA          #NC INPUT4                PAGE   9     1mm

     NO.    data       bit7 bit6 bit5 bit4 bit3 bit2 bit1 bit0
      1   00000000-00  SALM
      2   00000000-00  EALM      AMDT       AXCD AML2 AML1 AML0
      3   00000000-00                       AXD3 AXD2 AXD1 AXD0
      4   00000000-00  ERSF
      5   00000000-00            LOKW LOKV LOKU LOKZ LOKY LOKX
      6   00000000-00                       LOKC LOKB LOKA
      7   00000000-00  HP7  HP6  HP5  HP4  HP3  HP2  HP1  HP0
      8   00000000-00  HP31 HP30 HP29 HP28 HP27 HP26 HP25 HP24
      9   00000000-00  SAB  TAB  MAB  RTAB RSAB PRST
     10   00100000-20  ERST ESTR ETSP
     11   00100000-20            CLSW CLSV CLSU CLSZ CLSY CLSX
     12   00000000-00                       CLSC CLSB CLSA

.
PROGRAM  ACTUAL  PART    BLOCK                CHECK
SELECT   POSIT.  PROGRAM DATA    SEARCH       DATA    [EXTEND]

F1 F2 F3 F4 F5 F6 F7 F8
```

No. \ bit	bit 7	bit 6	bit 5	bit 4	bit 3	bit 2	bit 1	bit 0	Connector	Interface
1	System alarm									
2	EC alarm				Axis command given	← Alarm level (See Table 5-4.) →				
3					← Axis code (See Table 5-5.) →					
4	EC reset fin.									
5			← Feed release (Axis movement enabled) →							
			W	V	U	Z	Y	X		
6						← Feed release (Axis movement enabled) →				
						C	B	A		
7	← Home position →									
	7	6	5	4	3 (B pallet)	2 (A pallet)	1	0 (ATC)		
8	← Home position →									
	31	30	29	28	27	26	25	24		
9	← Completion of command →					External program execution command				
	S	T	M	RT	RS					
10	← External →									
	Reset	Start	Slide hold							
11			← Axis clamp →							
			W	V	U	Z	Y	X		
12						← Axis clamp →				
						C	B	A		

NC Input

```
AUTO OPERATION                                  O    N        1

CHECK DATA          *NC INPUT*              PAGE  10     1mm

     NO.    data        bit7 bit6 bit5 bit4 bit3 bit2 bit1 bit0
     13   00000000=00   PSVN CUPM                      SPCR SPZ
     14   00000000=00                             ADDC ADDB ADDA
     15   00000000=00
     16   00000000=00   HP23 HP22 HP21 HP20 HP19 HP18 HP17 HP16
     17   00000000=00   HP15 HP14 HP13 HP12 HP11 HP10 HP9  HP8
     18   00100000=20             SVRW SVRV SVRU SVRZ SVRY SVRX
     19   00000000=00                             SVRC SVRB SVRA
     20   00000000=00
     21   00000000=00                                       S2S4
     22   00000000=00                                       CSTB
     23   00000000=00   RATL AATL NATL PRLK ARLK NRLK
     24   10000000=80   PRLK RTLK PTLK NTLK       HPVU CHEP CHOK

.
PROGRAM | ACTUAL | PART | BLOCK |        |        | CHECK |
SELECT  | POSIT. | PROGRAM | DATA | SEARCH |        | DATA  | [EXTEND]

(F1) (F2) (F3) (F4) (F5) (F6) (F7) (F8)
```

No. \ bit	bit 7	bit 6	bit 5	bit 4	bit 3	bit 2	bit 1	bit 0	Connector	Interface
13	In power save	Robot coupling mode					Spindle const. speed	Spindle zero speed		
14						← Additional axis →				
						C	B	A		
15										
16	← Home position →									
	23	22	21	20	19	18	17	16		
17	← Home position →									
	15	14	13	12	11	10	9	8		
18			← Servo reset command input →							
			W	V	U	Z	Y	X		
19						← Servo reset command input →				
						C	B	A		
20										
21								S2-digit/S4-digit input		
22								Diagnosis execution command		
23	← AAC interlock (TALB) →			← AAC interlock (FOOR) →						
	Return attachment	Active attachment	Next attachment	Return attachment	Active attachment	Next attachment				
24	Parameter interlock	← Interlock (ATC) →				HP velocity parameter ineffective	Setting error	Check fin.		
		Return tool	Active tool	Next tool						

Table 5-4 Alarm Level

Alarm Level \ Symbol Mark	AML2	AML1	AML0
No alarm	0	0	0
Alarm P	1	0	0
Alarm A	0	1	1
Alarm B	0	1	0
Alarm C	0	0	1

Table 5-5 Axis Code

Axis \ Symbol Mark	(bit 3)	AXD2	AXD1	AXD0
X	0	0	0	1
Y	0	0	1	0
Z	0	0	1	1
U	0	1	0	0
V	0	1	0	1
W	0	1	1	0
A	0	1	1	1
B	1	0	0	0
C	1	0	0	1

(4) NC Output

On the "CHECK DATA *NC OUTPUT*" display screens, the on/off status of individual output signals from the NC processor are displayed. Provided on the following display screens are the CRT display and corresponding signal names. The numerals, a combination of 0s and 1s, at the left side of the CRT signify the on/off status of the corresponding output signals.

1 ..... Output signal ON

2 ..... Output signal OFF

NC Output

```
AUTO OPERATION                                  O    N        1

CHECK DATA          =NC OUTPUT=            PAGE  11     1mm

   NO.   data        bit7 bit6 bit5 bit4 bit3 bit2 bit1 bit0
    1   00000000-00                            MAL2 MAL1 MAL0
    2   00000000-00  ERSS                                MDRS
    3   00000000-00            DRVW DRVV DRVU DRVZ DRVY DRVX
    4   00000000-00                            DRVC DRVB DRVA
    5   00000000-00            UCLW UCLV UCLU UCLZ UCLY UCLX
    6   00000000-00                            UCLC UCLB UCLA
    7   00000000-00  HF7  HF6  HF5  HF4  HF3  HF2  HF1  HF0
    8   11111111-FF  HF31 HF30 HF29 HF28 HF27 HF26 HF25 HF24
    9   00000000-00            HPFW HPFV HPFU HPFZ HPFY HPFX
   10   00000000-00                            HPFC HPFB HPFA
   11   00000001-01  SF   TF   MF   RTF  RSF  PRSA      ALIP
   12   00000000-00  SVDI                     MINT ZLOK SLOK MLOK

PROGRAM SELECT | ACTUAL POSIT. | PART PROGRAM | BLOCK DATA | SEARCH | | CHECK DATA | (EXTEND)

F1 F2 F3 F4 F5 F6 F7 F8
```

No. \ bit	bit 7	bit 6	bit 5	bit 4	bit 3	bit 2	bit 1	bit 0	Connector	Interface
1						← Alarm →				
2	Reset command							Mode reset		
3			← Drive (ON during axis movement) →							
			W	V	U	Z	Y	X		
4						← Drive (ON during axis movement) →				
						C	B	A		
5			← Unclamp →							
			W	V	U	Z	Y	X		
6						← Unclamp →				
						C	B	A		
7	← HPINP →									
	7	6	5	4	3 (B pallet)	2 (A pallet)	1	0 (ATC)		
8	← HPINP →									
	31	30	29	28	27	26	25	24		
9			← HPINP →							
			W	V	U	Z	Y	X		
10						← HPINP →				
						C	B	A		
11	← Execution command →									
	S	T	M	RT	RS	Execution program selection answer		Distribution completed all axis positioning completed		
12	Spindle speed over inhibited				In manual int.	Z-axis cancel	In STM lock	In machine lock		

NC Output

```
AUTO OPERATION                    O    N        1

CHECK DATA          *NC OUTPUT*          PAGE  12     1mm

    NO.   data       bit7 bit6 bit5 bit4 bit3 bit2 bit1 bit0
    13   00000000-00 PPCF PRUN                FCYC FG00 FG01
    14   00000000-00          LMTW LMTV LMTU LMTZ LMTY LMTX
    15   00000000-00                         LMTC LMTB LMTA
    16   11111111-FF HP23 HP22 HP21 HP20 HP19 HP18 HP17 HP16
    17   11111111-FF HP15 HP14 HP13 HP12 HP11 HP10 HP9  HP8
    18   00000000-00          SOKW SOKV SOKU SOKZ SOKY SOKX
    19   00000000-00                         SOKC SOKB SOKA
    20   00000000-00
    21   00000000-00
    22   00000000-00
    23   00000000-00                         AACS TSTB CHRQ
    24   00000000-00     PTRF ULD  UWD  UBD  SLD  SWD  SBD

PROGRAM | ACTUAL | PART | BLOCK |        |        | CHECK |
SELECT  | POSIT. | PROGRAM | DATA | SEARCH |        | DATA  | [EXTEND]

F1  F2  F3  F4  F5  F6  F7  F8
```

No. \ bit	bit 7	bit 6	bit 5	bit 4	bit 3	bit 2	bit 1	bit 0	Connector	Interface
13	M02 fin.	Program running				In fixed cycle	In G00	In cutting		
14			← Limit ON →							
			W	V	U	Z	Y	X		
15						← Limit ON →				
						C	B	A		
16	← HPINP →									
	23	22	21	20	19	18	17	16		
17	← HPINP →									
	15	14	13	12	11	10	9	8		
18			← Servo OK →							
			W	V	U	Z	Y	X		
19						← Servo OK →				
						C	B	A		
20			← Second soft-limit →							
			W	V	U	Z	Y	X		
21						← Second soft-limit →				
						C	B	A		
22										
23						AAC set execute command	Tool data setting strobe	Diag. request		
24		PTR input fin.	← User parameter data →			← System parameter data →				
			Long word	Word	Byte	Long word	Word	Byte		

(5) Machine Input

On the "CHECK DATA *MACHINE INPUT*" display screens, the on/off status of individual input signals from the limit switches are displayed. Provided on the following display screens are the CRT display and corresponding signal names. The numerals, a combination of 0s and 1s, at the left side of the CRT signify the on/off status of the corresponding input signals.

1 ..... Switch ON (normal state for contact "B")

2 ..... Switch OFF (active state for contact "B")

Machine Input

```
AUTO OPERATION                                    N        0

CHECK DATA          *MACHINE INPUT*        PAGE  13    1mm

  NO.   date        bit7 bit6 bit5 bit4 bit3 bit2 bit1 bit0
   1  01011111=5F   MGAC OKM/      OLM/ OL4/ OLZ/ OLY/ OLX/
   2  00000111=07   MGCC MGCW MMIT PUT/ THPO STEN AXE/ ESP/
   3  00000000=00   EMAW MGIR DCLS DOPN DIRS DILE CPCC CPCW
   4  00000011=03   4AUC 4ACL 4AON CIPN WKSW OLHM COLM LUBM
   5  11111111=FF   OSUC OSCL FDOP FDCL COLV CRCN LBPD LBPR
   6  00011111=1F   TPBA PBTU PBTC PBTY STNE STEC ISUC ISCL
   7  00001010=0A   CLV/ AIRO MGDC MGNT ATDO ATDC RTCB RTCF
   8  00000000=00                      OAO/       RUTG RUTR
   9  01010101=55   APAC OKA/ AOL/ APMP APDC APDO WKFS PMIT
  10  00010001=11   APAC OKA/ LSBT LSAT PUCL PCLP APDC APDO
  11  10000000=80                   LSPD LSPT LSBD LSAD APSM
  12  00000000=00

=
PROGRAM SELECT | ACTUAL POSIT. | PART PROGRAM | BLOCK DATA | SEARCH | ATC/APC | CHECK DATA | [EXTEND]
```

F1 F2 F3 F4 F5 F6 F7 F8

No. \ bit	bit 7	bit 6	bit 5	bit 4	bit 3	bit 2	bit 1	bit 0	Connector	Interface
1	MG-axis motion enable	MG-axis normal		MG-axis motor OL	4th-axis motor OL (A or C)	Z-axis motor OL	Y-axis motor OL	X-axis motor OL		
2	MG manual operation reverse	MG manual operation forward	MG operation manual intervention	Work lamp power source normal	Panel thermal abnormal	Axis stroke end released	NC-axis stroke end	Operation power ON		
3	External M signal answer	MG door interlock restart	Automatic door close	Automatic door open	Operation door interlock restart	Operation door interlock cancel	Chip conveyor reverse	Chip conveyor forward		
4	A-/C-axis unclamp (4th-axis)	A-/C-axis clamp (4th-axis)	A-/C-axis joint confirmation (4th-axis)	Chip conveyor motor ON	Work shower coolant motor ON	Through-the-tool coolant motor ON	Coolant motor ON	(Lubrication motor ON)		
5	Spindle tool outer cylinder unclamp	Spindle tool outer cylinder clamp	Front door open	Front door close	Spindle-head cooling unit oil level nor-	Spindle-head cooling unit	(Lubrication oil level normal)	(Lubrication oil pressure confirmation)		
6	Touch probe battery alarm	Spindle tool unclamp	Spindle tool clamp	Tool change preparation	No tool clamp	Tool exist clamp	Tool spindle inner cylinder unclamp	Tool spindle inner cylinder clamp		
7	bit7 Coolant oil level normal	System air pressure normal	Magazine manual door close	No tool in magazine pot	ATC automatic door open	ATC automatic door close	Standby cylinder retract	Standby cylinder advance		
8					Oil/air lubricating unit normal		No tool in standby unit	Tool grip in standby unit		
9	APC axis motion enable	APC axis normal	APC axis motor OL	APC hydraulic pump normal	APC door open	APC door close	Work preparation completed	APC manual interruption ON		
10	APC restart	Pallet seating check	B-pallet exist (standby position)	A-pallet exist (standby position)	Pallet unclamp confirm	Pallet clamp confirm	APC door close confirm	APC door open confirm		
11				Pallet travel setup position)	Pallet travel standby position	B-pallet exist (setup position)	A-pallet exist (setup position)	APC safety mat		
12										

(6) Machine Output

On the "CHECK DATA *MACHINE OUTPUT*" display screens, the on/off status of individual output signals to solenoids and relays are displayed. Provided on the following display screens are the CRT display and corresponding signal names. The numerals, a combination of 0s and 1s, at the left side of the CRT signify the on/off status of the corresponding output signals.

1 ..... Solenoid/relay ON

2 ..... Solenoid/relay OFF

Machine Output

```
AUTO OPERATION                                N        0

CHECK DATA          *MACHINE OUTPUT*      PAGE  15    1mm

     NO.   date        bit7 bit6 bit5 bit4 bit3 bit2 bit1 bit0
      1  00011011=1B   BUZZ ALML WRKL LIHT SPUT PWOF VACF LDON
      2  00000000=00   MDIL AALR 3RDL CPCW WKSW OHLM COLM LUBM
      3  00000000=00   MGON MGAR STUC STCL TCCY MMIT APON
      4  11100011=E3   EXM8 EXM7 EXM6 EXM5 EXM4 EXM3 EXM2 EXM1
      5  00000000=00        MIST ARNS AIRB ISUC OSUC      ZUBR
      6  00000000=00   TSAB 4ACL ADRO ADRC TSAB DROP RTCB RTCF
      7  00000001=01        APAR APDC PLUS PLCS PCLP RUTR RUTG
      8  00000000=00                      APPD APPT WKPL APMI
      9  00000000=00
     10  10000000=80
     11  00000000=00
     12  00000000=00

=
PROGRAM SELECT | ACTUAL POSIT. | PART PROGRAM | BLOCK DATA | SEARCH | ATC/APC | CHECK DATA | [EXTEND]

F1 F2 F3 F4 F5 F6 F7 F8
```

No. \ bit	bit 7	bit 6	bit 5	bit 4	bit 3	bit 2	bit 1	bit 0	Connector	Interface
1	Operation and buzzer ON	Alarm lamp ON	Operation end lamp ON	Work lamp ON	Spindle coolant unit ON	Power shut-off ON	VAC motor ready complete	NC-axis D/U ON		
2	Magazine door interlocked	APC axis alarm reset	Chip conveyor reverse	Chip conveyor forward	Work shower motor ON	Oil motor ON	Coolant motor ON	Lubricant motor ON		
3	MG-axis current command ON	MG-axis alarm reset	Spindle tool unclamp	Spindle tool clamp	Tool change preparation	Magazine manual intervention ON	APC axis current command ON	Chip conveyor ON		
4	External M signal output 8 M188	External M signal output 7 M187	External M signal output 6 M186	External M signal output 5 M185	External M signal output 4 M184	External M signal output 3 M183	External M signal output 2 M182	External M signal output 1 M181		
5		Oil mist	Chip air blow	ATC air blow	Spindle tool inner cylinder unclamp	Spindle tool outer cylinder unclamp		Z-axis brake release		
6	Damage detector air blow	A-/C-axis clamp	Front door automatic open	Front door automatic close	ATC door automatic close	ATC door automatic open	Standby cylinder retract	Standby cylinder advance		
7		Pallet air blow	APC door close	APC door open	Pallet unclamp	Pallet clamp	No tool in standby unit	Tool grip in standby unit		
8					Pallet travel setup position	Pallet travel standby position	Work preparation completed	APC manual interruption ON		
9										
10										
11										
12										

(7) Machine Extend Input

On the "CHECK DATA *MACHINE EX INPUT*" display screens, the on/off status of individual input signals from the limit switches are displayed. Provided on the following display screens are the CRT display and corresponding signal names. The numerals, a combination of 0s and 1s, at the left side of the CRT signify the on/off status of the corresponding input signals.

1 ..... Switch ON (normal state for contact "B")

0 ..... Switch OFF (active state for contact "B")

Machine Extend Input

```
AUTO OPERATION                    O    N        1

CHECK DATA        *MACHINE EX INPUT*    PAGE  25    1mm

    NO.    data       bit7 bit6 bit5 bit4 bit3 bit2 bit1 bit0
     1   00000000-00
     2   00000000-00
     3   00000000-00
     4   00000000-00
     5   11110000-F0                                    MSG15

PROGRAM SELECT | ACTUAL POSIT. | PART PROGRAM | BLOCK DATA | SEARCH | | CHECK DATA | [EXTEND]

F1  F2  F3  F4  F5  F6  F7  F8
```

No. \ bit	bit 7	bit 6	bit 5	bit 4	bit 3	bit 2	bit 1	bit 0	Connector	Interface
1										
2										
3										
4										
5										
6										
7										
8										
9										
10										
11										
12										

(8) Machine Extend Output

On the "CHECK DATA *MACHINE EX OUTPUT*" display screens, the on/off status of individual output signals to solenoids and relays are displayed. Provided on the following display screens are the CRT display and corresponding signal names. The numerals, a combination of 0s and 1s, at the left side of the CRT signify the on/off status of the corresponding output signals.

1 ..... Solenoid/relay ON

0 ..... Solenoid/relay OFF

Machine Extend Output

```
AUTO OPERATION                                  O   N        1

CHECK DATA          *MACHINE EX OUTPUT*    PAGE  25     1mm

      NO.    data        bit7 bit6 bit5 bit4 bit3 bit2 bit1 bit0
       1   00000000-00
       2   00000000-00
       3   00000000-00
       4   00000000-00
       5   00100000-20        [illegible]

*
PROGRAM | ACTUAL | PART | BLOCK |        |        | CHECK |
SELECT  | POSIT. | PROGRAM | DATA | SEARCH |        | DATA  | [EXTEND]

F1  F2  F3  F4  F5  F6  F7  F8
```

No. \ bit	bit 7	bit 6	bit 5	bit 4	bit 3	bit 2	bit 1	bit 0	Connector	Interface
1										
2										
3										
4										
5										
6										
7										
8										
9										
10										
11										
12										

(9) NC Axis Data

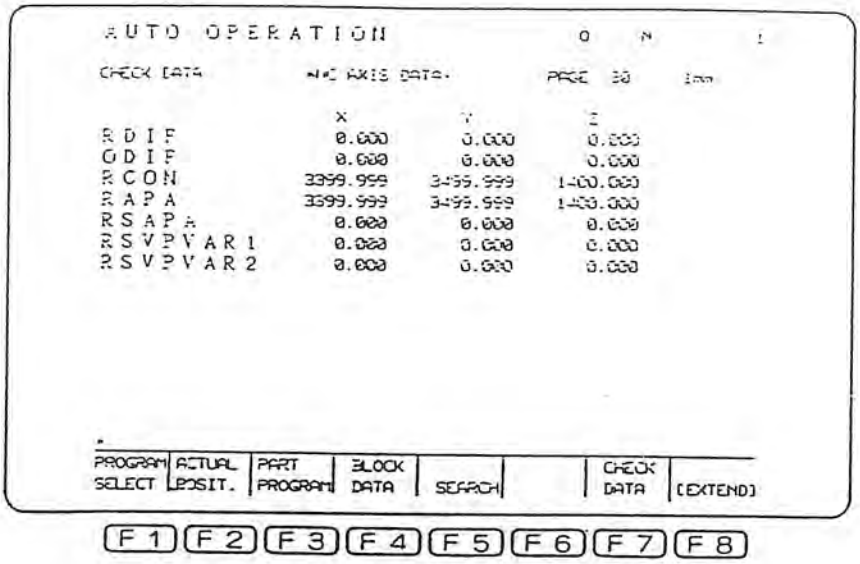

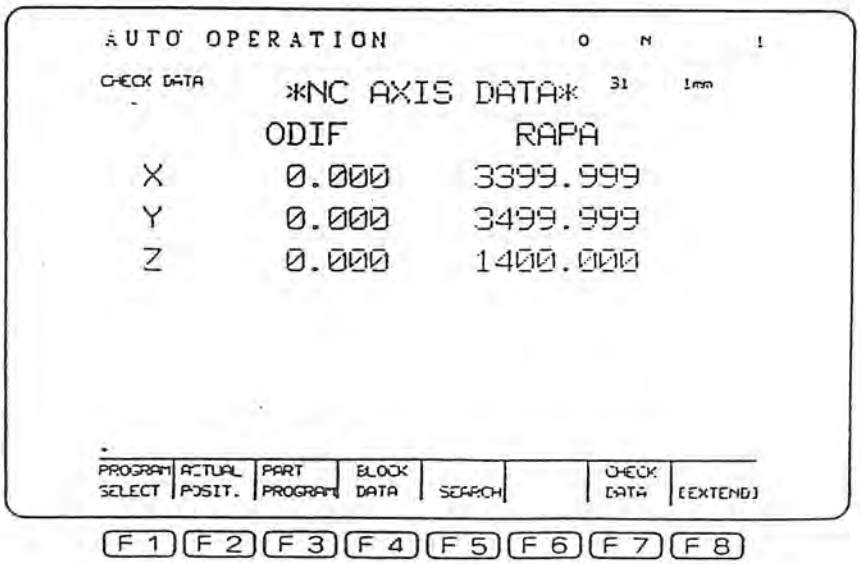

RDIF	Difference between calculated value and detected value
ODIF	Difference between calculated value with acceleration/deceleration taken into account and detected value
RCON	Calculated value
RAPA	Detected value
RSAPA	Position detected value when contact with touch sensor
RSVVAR1 } RSVVAR2	Sensor data (values designated by NC optional parameter (word) No. 10)

(10) Machine Axis Data

```
AUTO OPERATION                                          N      1

CHECK DATA          *MACHINE AXIS DATA*   PAGE 24      1 mm

                    CA          MG1
RDIF                 0            0
RCON                 0      1310719
RAPA                 0      1310719
RCOM                 0            0

PROGRAM | ACTUAL | PART | BLOCK |        |        | CHECK |
SELECT  | POSIT. | PROGRAM | DATA | SEARCH |        | DATA  | (EXTEND)
```

F1 F2 F3 F4 F5 F6 F7 F8

CA : (Not used)

MG1 : Magazine axis

W : APC shifter axis (for the parallel 2-pallet APC)

RDIF ..... Difference between calculated value and detected value

RCON ..... Calculated value

RAPA ..... Detected value

RCOM ..... Commanded value

3. NC Diagnostic Display

The state of memory within the NC can be grasped by the diagnostic display on the CRT. Also, it is convenient because the display form can be selected among decimal number, hexadecimal, floating-point number, bit-string, etc.

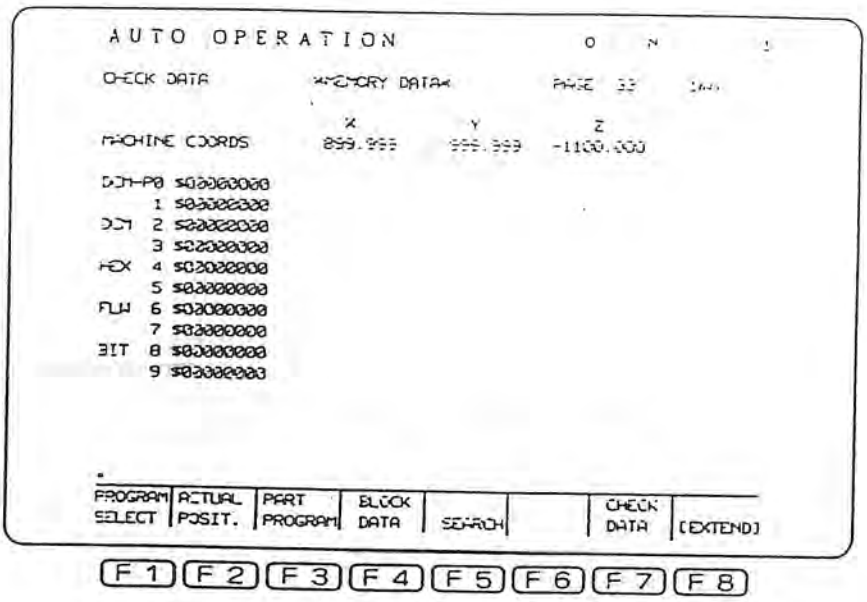

When this page is to be used, please consult your local Okuma representative.

4. Machine Diagnostic Display

When any of the requirements for the operation of the machine is not fulfilled, it can be seen through diagnostic data displayed on the CRT which condition is not fulfulled, preventing the operation. The cause of the machine trouble will be easily found out by checking the input and output signal status display explained on Section 6. 2. "Diagnosis Message Display" along with this machine diagnostic display.

SECTION 6 MACHINE OPERATIVE CONDITIONS, DIAGNOSIS MESSAGES AND LOGIC TABLES

1. Machine Operative Conditions

Item		Condition
Main Spindle Rotation		1) Spindle tool is clamped. 2) Tool is not being changed. 3) Interlock by ATC sequence is released. 4) Tool is in the spindle (Refer to 4. "Special Operation")
Spindle Indexing		Same as the main spindle rotation conditions.
Allowable Range	All axes	1) Interlock by ATC sequence is released. 2) Interlock by APC sequence is released.
	X-axis	1) Pallet is clamped. (APC specification)
	Y-axis	1) Pallet is clamped. (APC specification)
	Z-axis	1) Pallet is clamped. (APC specification) 2) With ATC operation sequence No. "10" LS's are ON for checking tool is unclamped by outer and inner cylinders.
Magazine Indexing		1) Standby unit cylinder is advancing. 2) Tool is not in the standby unit.

2. Diagnosis Message Display

The diagnose message display function indicates conditions required for the intended step but not satisfied on the display.

This message display function can be indicated in the automatic, MDI and manual modes.

Operation Procedure:

1) Press any of **AUTO, MANUAL** and **MDI** keys.

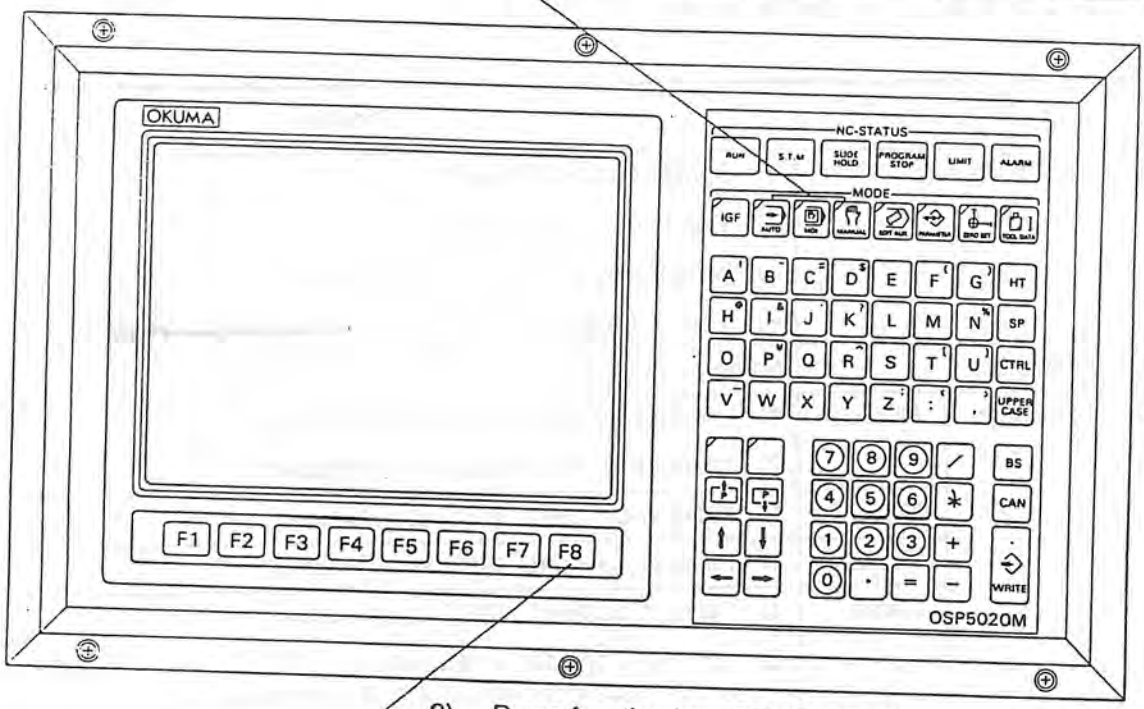

2) Press function key [F8] (EXTEND).

1) Press any of **AUTO, MDI** and **MANUAL** keys.

The function keys are assigned the same functions for [F2] through [F8]. Functions available with function key [F1] depends on the mode selected:

=CH
=

PROGRAM SELECT	ACTUAL POSIT.	PART PROGRAM	BLOCK DATA	SEARCH		CHECK DATA	[EXTEND]
F 1	F 2	F 3	F 4	F 5	F 6	F 7	F 8

AUTO ..... PROGRAM SELECT
MDI ..... DATA INPUT
MANUAL ..... None

2) Press function key [F8] (EXTEND).

This changes function key guide messages.

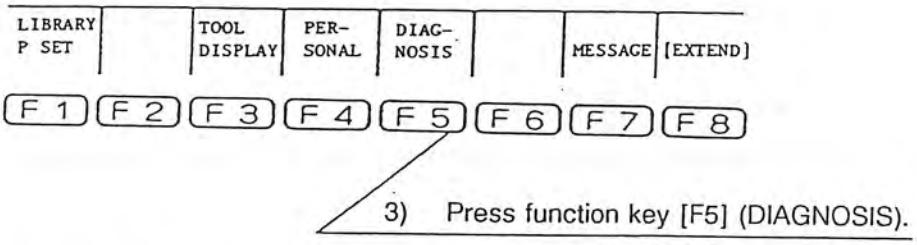

3) Press function key [F5] (DIAGNOSIS).

The diagnose messages will be displayed on the CRT.

The messages displayed are indicated on the following pages.

Diagnosis Message List

3000 X-axis servo is not OK

This message is displayed when the X-axis servo drive unit ON signal is not turned on.

3001 Y-axis servo is not OK

This message is displayed when the Y-axis servo drive unit ON signal is not turned on.

3002 Z-axis servo is not OK

This message is displayed when the Z-axis servo drive unit ON signal is not turned on.

3004 A-axis servo is not OK

This message is displayed when the A-axis servo drive unit ON signal is not turned on.

3006 C-axis servo is not OK

This message is displayed when the C-axis servo drive unit ON signal is not turned on.

3010 A-axis UNCLAMP LS is not ON

This message is displayed when the A-axis unclamp LS is not turned on when the A-axis rotation command is given.

3012 C-axis UNCLAMP LS is not ON

This message is displayed when the C-axis unclamp LS is not turned on when the C-axis rotation command is given.

3028 A-axis CLAMP LS is not OFF

This message is displayed when the A-axis clamp LS is not turned off when the A-axis rotation command is given.

3030 C-axis CLAMP LS is not OFF

This message is displayed when the C-axis clamp LS is not turned off when the C-axis rotation command is given.

3032 Axis movement prohibited by APC sequence operations

When the APC operation sequence No. is in the following ranges, the X, Y, and Z axes cannot move except for the sequence operation for pallet movement on the table.

4 - 11, 15 - 32

3040 Spindle has not stopped

This message is displayed when the spindle speed is not below 5 rpm or the spindle zero speed signal in the spindle drive unit is not turned on.

In other words, the message is displayed when the spindle is not at a still when the ATC operation sequence number is within the following range:

4 - 12

3041 ATC sequence is in spindle rotation inhibit

The spindle rotation is disabled when the ATC operation sequence number is within following range. If the spindle rotation command is active under this condition, this message is displayed.

4 - 12

3052 External M command answer back is not ON

This message is displayed until the external M completion signal is turned on when an external M signal (M181 - M199) is given.

3053 External M command answer back is not OFF

The OSP5020M/OSP500M-G assumes that the external M signal (M181 - M199) is completed at the time the answer back signal is turned off after it has been turned on once. Therefore, this message is displayed while the answer back signal stays on.

3131 Operation door interlock

The interlock function is provided to disable the NC operation when the operation door close confirmation LS is not ON. This message is displayed under such condition.

3133 Spindle drive unit is not READY

This message is displayed if the spindle ready completion signal from the spindle drive unit is not ON when the spindle rotation command is given.

3150 Spindle orientation is not completed

For the automatic tool change cycle, an interlock is provided to disable the tool change arm operations (rotation, insert, or extract) unless the spindle is orient-stopped. That is, the ATC cannot operate and this alarm is displayed if the spindle is not orient-stopped while the ATC operation sequence number is within the following range:

8

Note: The spindle orientation position is set at SPINDLE ORIENT of the machine system parameter (long word) No. 48.

3151 HP1 is not completed

In the automatic tool change cycle, the ATC operation sequence might not advance to the next unless any of the axes is located at the tool change standby position while the ATC operation sequence number is within the following range. This message is displayed under such conditions.

4, 13, 18

The tool change standby position is set at HOME POSITION 1 of system parameter.

3152 HP2 is not completed

In the automatic tool change cycle, the ATC operation sequence might not advance to the next unless any of the axes is located at the tool change preparation position while the ATC operation sequence number is within the following range. This message is displayed under such conditions.

5, 12

The tool change preparation position is set at HOME POSITION 2 of system parameter.

3153 HP has not been completed

When the APC operation sequence No. is 3 or 18 and no axis is in A-pallet change position, APC sequence may not advance to the next by displaying this message. The A-pallet change position is set at home position No.3 in the system parameter.

3154 HP 4 has not been completed

When APC operation sequence No. is 7 or 14, and no axis is in B-pallet change position APC sequence may not advance to the next by displaying this message. B-pallet change position is set at Home Position No.4 in system parameter.

3155 HP5 is not completed

In the automatic tool change cycle, the ATC operation sequence might not advance to the next unless any of the axes is located at the tool change position while the ATC operation sequence number is within the following range. This message is displayed under such conditions.

6 - 7, 10 - 11

The tool change position is set at HOME POSITION 5 of system parameter.

3156 HP6 is not completed

In the automatic tool change cycle, the ATC operation sequence might not advance to the next unless any of the axes is located at the Z-axis retract position while the ATC operation sequence number is within the following range. This message is displayed under such conditions.

8 - 9, 15 - 16

The Z-axis retract position is set at HOME POSITION 6 of system parameter.

3183 Magazine index is not completed

The ATC operation dose not advance to the next sequence when the magazine pot is indexed in correct position while the ATC operation sequence number is within the following range:

2, 9

3188 ATC sequence is in magazine index inhibit

In the automatic tool change cycle, magazine rotation is disabled when the ATC operation sequence number is within the following range. This message is displayed under such conditions.

6 - 8, 11 - 12

3189 Magazine pot is safety tool

This message is displayed when the pot for which a dummy tool is assigned is indexed to the tool change position while the ATC operation sequence number is within the following range:

2, 9

3190 No tool in magazine LS is not ON

In the automatic tool change cycle, the ATC operation sequence might not advance to the next when the no tool in magazine confirmation LS is not ON while the ATC operation sequence number is within the following range. This message is displayed under such condition.

4, 5

3191 Magazine manual interruption is not OFF

In the automatic tool change cycle, the ATC operation sequence might not advance to the next when the magazine manual interruption switch is ON while the ATC operation sequence number is within the following range. This message is displayed under such condition.

1 - 20

3192 Spindle tool CLAMP LS is not ON

The interlock function is provided to disable the spindle rotation when the spindle tool inner cylinder clamp confirmation LS is not ON. This message is displayed under such condition. In the automatic tool change cycle, the ATC operation sequence might not advance to the next when the spindle tool inner cylinder clamp confirmation LS is not ON while the ATC operation sequence number is within the following range. This message is also displayed under such condition.

1 - 6, 11 - 15, 17 - 20

3193 Spindle tool CLAMP LS is not OFF

In the automatic tool change cycle, the ATC operation sequence might not advance to the next when the spindle tool inner cylinder clamp confirmation LS is not OFF while the ATC operation sequence number is within the following range. This message is displayed under such condition.

7 - 10, 16

3194 Spindle tool UNCLAMP LS is not ON

In the automatic tool change cycle, the ATC operation sequence might not advance to the next when the spindle tool inner cylinder unclamp confirmation LS is not ON while the ATC operation sequence number is within the following range. This message is displayed under such condition.

7 - 10, 16

3195 Spindle tool UNCLAMP LS is not OFF

The interlock function is provided to disable the spindle rotation when the spindle tool inner cylinder unclamp confirmation LS is not OFF. This message is displayed under such condition. In the automatic tool change cycle, the ATC operation sequence might not advance to the next when the spindle tool inner cylinder unclamp confirmation LS is not OFF while the ATC operation sequence number is within the following range. This message is displayed under such condition.

1 - 6, 11 - 15, 17 - 20

3330 Magazine door interlocked

The interlock function is provided to disable the magazine rotation when the magazine manual door is opened. This message is displayed under such condition.

3400 APC manual interruption is not turned OFF

This message appears when the manual interruption switch on the APC panel is turned ON during execution of APC pallet change command (M60).

3401 Work ready check switch is not ON

This massage appears when the pallet change is commanded (M60) but work is not loaded on the pallet to be changed. (However, when the work preparation finish button is pressed, the NC judges that work has been prepared.

3410 LS for checking existence of L(A)-pallet is not ON

If the APC operation sequence No. is 9, 12, or 17 and the LS for checking existence of A-pallet (in standby position or setup petition) is not ON, the APC operation sequence may not advance to the next by displaying this massage.

3411 **LS for checking existence of L(A)-pallet is not OFF**

If the APC operation sequence No. is 1 or 5 and the LS for checking existence of A-pallet (in standby position or setup petition) is not OFF, the APC operation sequence may not advance to the next by displaying this massage.

3412 **LS for checking existence of R(B)-pallet is not ON**

If the APC operation sequence No. is 1, 6, or 20 and the LS for checking existence of B-pallet (in standby position or setup petition) is not ON, the APC operation sequence may not advance to the next by displaying this massage.

3413 **LS for checking existence of R(B)-pallet is not OFF**

If the APC operation sequence No. is 12 or 16 and the LS for checking existence of B-pallet (in standby position or setup petition) is not OFF, the APC operation sequence may not advance to the next by displaying this massage.

3414 **Pallet seating PS is not ON**

If the APC operation sequence No. is 11 or 22, and the pallet seating check PS is not ON, the APC operation sequence may not advance to the next by displaying this message.

3416 **Pallet clamp LS is not ON**

If the APC operation sequence No. is 11 or 12 and the pallet clamp check LS is not ON, the APC operation sequence may not advance to the next by displaying this message.

3418 **Pallet unclamp LS is not ON**

If the APC operation sequence No. is in the following ranges and the pallet unclamp check LS is not ON, the APC operation sequence may not advance to the next by displaying this message.

4 - 9, 15 - 20

3434 **APC door open LS is not ON**

If the APC operation sequence No. is in the following ranges and the pallet unclamp check LS is not ON, the APC operation sequence may not advance to the next by displaying this message.

4 - 10, 15 - 21

3558 **Pallet loading LS is not ON**

If the APC operation sequence No. is in the following ranges and the LS for checking the pallet travel to standby position is not ON, the APC operation sequence may not advance to the next by displaying this message.

4 - 10, 15 - 21

3559 Pallet loading LS is not OFF

If the APC operation sequence No. is in the following ranges and the LS for checking the pallet travel to standby position is not OFF, the APC operation sequence may not advance to the next by displaying this message.

1 - 4, 9 - 15, 2 - 22

3560 Pallet unloading LS is not ON

If the APC operation sequence No. is in the following ranges and the LS for checking the pallet travel to setup position is not ON, the APC operation sequence may not advance to the next by displaying this message.

1 - 4, 9 - 15, 20 - 22

3561 Pallet unloading LS is not OFF

If the APC operation sequence No. is in the following ranges and the LS for checking the pallet travel to setup position is not OFF, the APC operation sequence may not advance to the next by displaying this message.

5 - 8, 16 - 19

3566 Spindle tool outer cylinder UNCLAMP LS is not ON

In the automatic tool change cycle, the ATC operation sequence might not advance to the next when the spindle tool outer cylinder unclamp confirmation LS is not ON while the ATC operation sequence number is within the following range. This message is displayed under such condition.

6 - 11, 15 - 17

3567 Spindle tool outer cylinder UNCLAMP LS is not OFF

The interlock function is provided to disable the spindle rotation when the spindle tool outer cylinder unclamp confirmation LS is not OFF. This message is displayed under such condition. In the automatic tool change cycle, the ATC operation sequence might not advance to the next when the spindle tool outer cylinder unclamp confirmation LS is not OFF while the ATC operation sequence number is within the following range. This message is displayed under such condition.

1 - 5, 12 - 14, 18 - 20

3570 Pallet has not been in advance position

If the operation sequence No. is 8, 9, 19, or 20 and APC shifter is not in the pallet loading position, the APC operation sequence may not advance to the next by displaying this message. pallet loading position is set at No. 42 (shifter P limit) in the system parameter.

3571 Pallet has not been in change position

If the operation sequence No. is 6, 7, 17, or 18 and APC shifter is not in the pallet unloading position, the APC operation sequence may not advance to the next by displaying this message. The pallet unloading position is set at No. 43 (shifter N limit) in the system parameter.

3930 **Spindle tool outer cylinder CLAMP LS is not ON**

The interlock function is provided to disable the spindle rotation when the spindle tool outer cylinder clamp confirmation LS is not ON. This message is displayed under such condition. In the automatic tool change cycle, the ATC operation sequence might not advance to the next when the spindle tool outer cylinder clamp confirmation LS is not ON while the ATC operation sequence number is within the following range. This message is displayed under such condition.

1 - 5, 12 - 14, 18 - 20

3931 **Spindle tool outer cylinder CLAMP LS is not OFF**

In the automatic tool change cycle, the ATC operation sequence might not advance to the next when the spindle tool outer cylinder clamp confirmation LS is not OFF while the ATC operation sequence number is within the following range. This message is displayed under such condition.

6 - 11, 15 - 17

3934 **No-spindle-tool LS is not ON**

The ATC command is given when the current tool No. is specified. If, under such conditions, the ATC operation sequence No. is 3 and the no-spindle-tool LS is not ON, the ATC operation sequence may not advance to the next by displaying this message.

3935 **No tool in spindle LS is not OFF**

Set TC Tool # in ATC Tool set Page

The interlock function is provided to disable the spindle rotation when the spindle rotation command is given and no tool in spindle LS is not OFF. This message is displayed under such condition. The ATC command is given when the current tool No. is specified. If the no-spindle-tool LS is ON under such conditions, the spindle is interlocked not to rotate by displaying this message.

3940 **Standby cylinder ADVANCE LS is not ON**

The interlock function is provided to disable the magazine rotation when the magazine rotation command is given and the standby cylinder advance confirmation LS is not ON. In the automatic tool change cycle, when the dummy tool is not in the toolpot adjacent to the specified next toolpot, the tool in the adjacent pot is retracted automatically. This message is displayed when the standby cylinder advance confirmation LS is not ON under such condition.

3941 **Standby cylinder ADVANCE LS is not OFF**

In the automatic tool change cycle, when the dummy tool is not in the toolpot adjacent to the specified next toolpot, the tool in the adjacent pot is retracted automatically. This message is displayed when the standby cylinder advance confirmation LS is not OFF under such condition.

3942 Standby cylinder RETRACT LS is not ON

In the automatic tool change cycle, when the dummy tool is not in the toolpot adjacent to he specified next toolpot, the tool in the adjacent pot is retracted automatically. This message is displayed when the standby cylinder retract confirmation LS is not ON under such condition.

3943 Standby cylinder RETRACT LS is not OFF

In the automatic tool change cycle, when the dummy tool is not in the toolpot adjacent to the specified next toolpot, the dummy tool is retracted automatically. This message is displayed when the standby cylinder retract confirmation LS is not OFF under such condition.

3944 Standby unit tool GRIP LS is not ON

In the automatic tool change cycle, when the dummy tool is not in the toolpot adjacent to the specified next toolpot, the tool in the adjacent pot is retracted automatically. This message is displayed when the standby unit tool grip confirmation LS is not ON under such condition.

3945 Standby unit tool GRIP LS is not OFF

In the automatic tool change cycle, when the dummy tool is not in the toolpot adjacent to the specified next toolpot, the tool in the adjacent pot is retracted automatically. This message is displayed when the standby unit tool grip confirmation LS is not OFF under such condition.

3946 Standby unit tool UNGRIP LS is not ON

The interlock function is provided to disable the magazine rotation when the magazine rotation command is given and the standby unit tool ungrip confirmation LS is not ON. In the automatic tool change cycle, when the dummy tool is not in the toolpot adjacent to the specified next toolpot, the tool in the adjacent pot is retracted automatically. This message is displayed when the standby unit tool ungrip confirmation LS is not ON under such condition.

3947 Standby unit tool UNGRIP LS is not OFF

In the automatic tool change cycle, when the dummy tool is not in the toolpot adjacent to the specified next toolpot, the tool in the adjacent pot is retracted automatically. This message is displayed when the standby unit tool ungrip confirmation LS is not OFF under such condition.

3948 ATC door open LS is not ON

In the automatic tool change cycle, the ATC operation sequence might not advance to the next when the ATC door open confirmation LS is not ON while the ATC operation sequence number is within the following range. This message is displayed under such condition.

5 - 12, 15 - 18

3950 ATC door close check LS is not OFF

If the ATC operation sequence No. is 4 and the ATC door close check LS is not OFF, the ATC operation sequence may not advance to the next by displaying this message.

3. ATC/APC Operation

3-1. ATC

(1) Operation Sequence Diagram

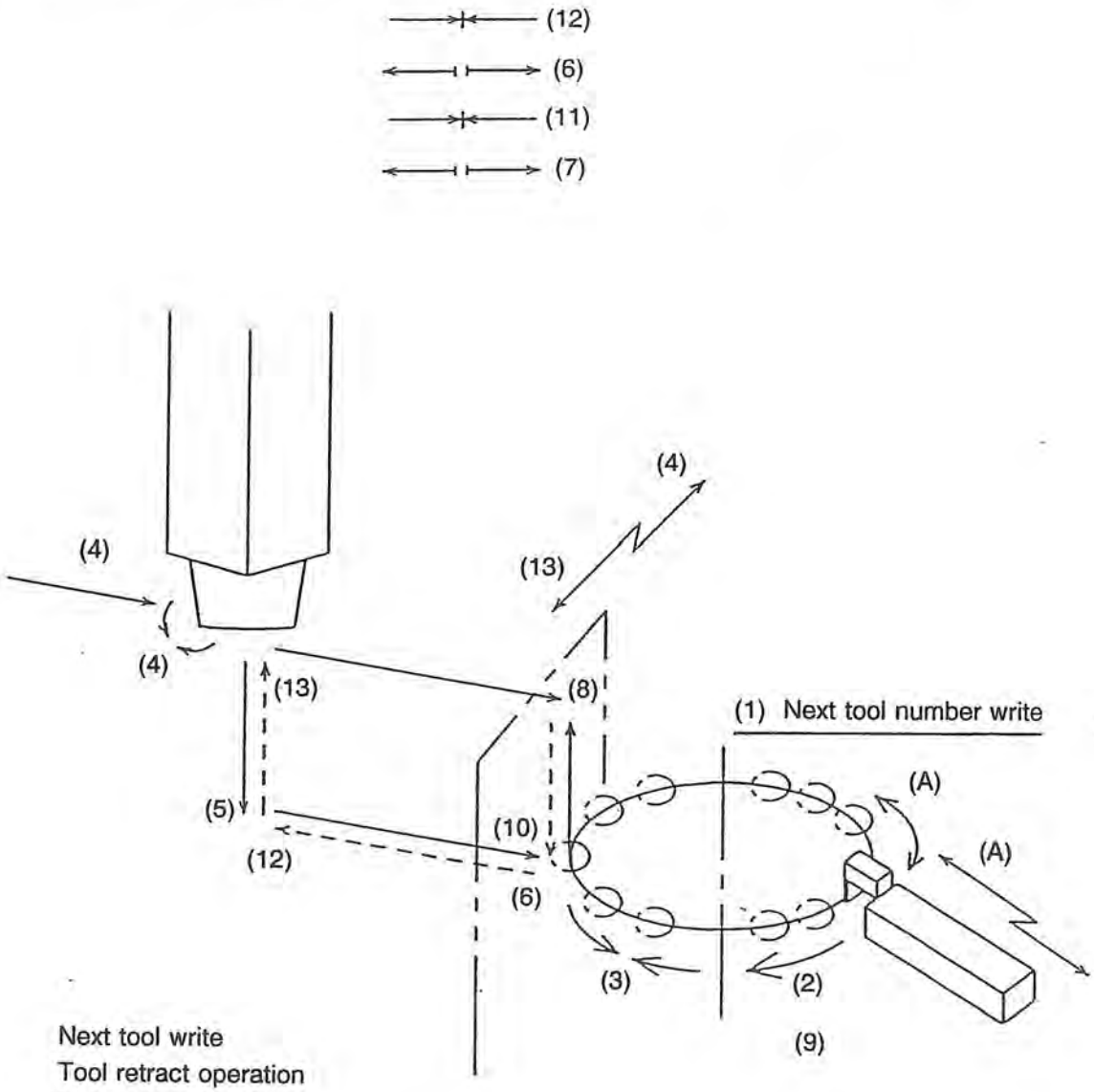

(1)	Next tool write
(A)	Tool retract operation
(2)	Tool retract operation
(3)	Return pot index
(4)	Waiting for machining cycle completion
(5)	Tool change standby position, spindle orientation, ATC door open
(6)	Tool change preparation position
(7)	Spindle tool inner cylinder unclamp
(8)	Z-axis retract position
(9)	Next tool index
(10)	Tool change position
(11)	Spindle tool inner cylinder clamp
(12)	Tool change standby position, spindle tool outer cylinder clamp
(13)	Tool change standby position, ATC door close

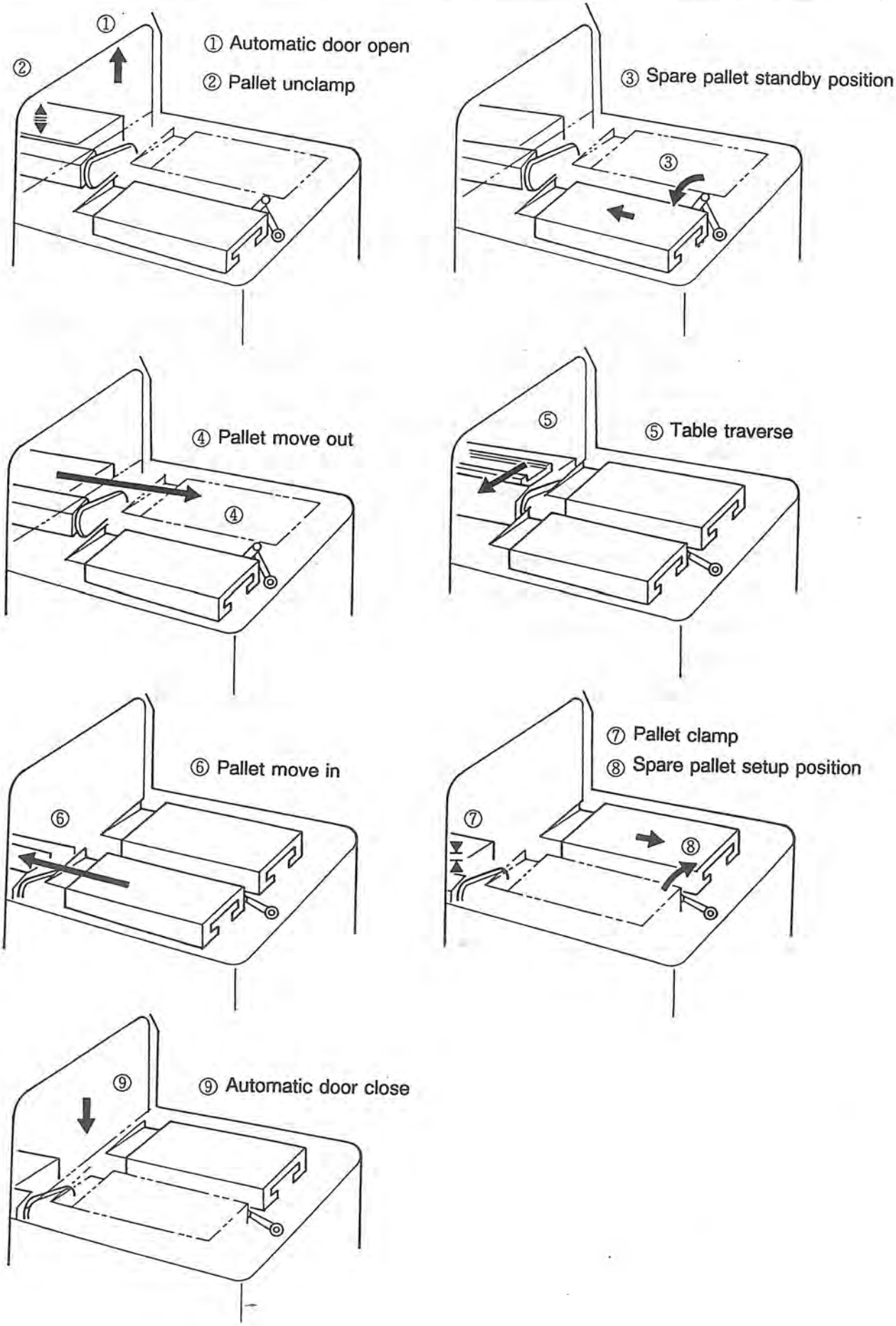
① Automatic door open
② Pallet unclamp
③ Spare pallet standby position
④ Pallet move out
⑤ Table traverse
⑥ Pallet move in
⑦ Pallet clamp
⑧ Spare pallet setup position
⑨ Automatic door close

4. Special Operation

4-1. Spindle No Tool Interlock

It is very dangerous to rotate the spindle while the spindle tool is not gripped by the pull stud correctly. Spindle rotation will be interlocked when incorrect gripping of the pull stud is detected. The ATC operation is also interlocked with defection gropping of the pull stud.

(a) If the current tool No. is specified (current tool No. is not 00) and the no-tool clamp LS is ON, the ATC operation can not advance from the sequence No. 3 (Waiting for the end of machine cycle).

(b) If the current tool No. is not specified (current tool No. is 00) and the no-tool clamp LS is OFF, the ATC operation can not advance from the sequence No. 3 (Waiting for the end of machine cycle). However, interlocking of the ATC operation is effective only for 1 cycle though the spindle cannot be rotated without spindle tool on it, ATC 1 operation is possible with defective gripping of the pull stud .

To cancel the interlock, follow the operation below.

(1) Manual Operation Mode

Set "1" at the machine user parameter (bit) No. 13, bit 6.

This parameter can be cleared ("0") by turning the power off.

(2) Automatic and MDI Operation Modes

The interlock can be canceled with the M command.

M328 . . . . Interlock effective (modal)

M329 . . . . Interlock ineffective (modal)

M328 state is effective when the NC has been reset (including mode reset).

5. Logic Table

5-1. How to Read Logic Tables

(1) Input Logic Table

ATC (APC) operation sequence numbers are indicated at the leftmost column from the top to bottom sequentially. Input conditions corresponding to the given ATC (APC) sequence are indicated by circles.

When the automatic tool (pallet) change cycle is carried out continuously in the automatic operation mode, the sequence advances by one step when all these input conditions are met. That is, the table indicates the input conditions in the automatic mode operation.

(2) Output Logic Table

ATC (APC) operation sequence numbers are indicated at the leftmost column from the top to bottom sequentially. Outputs given at the given ATC (APC) sequence are indicated by circles.

(3) Manual Interlock Table

ATC (APC) operation sequence numbers are indicated at the leftmost column from the top to bottom sequentially.

Interlock conditions for each ATC (APC) sequence are indicated by circles.

When the automatic tool (pallet) change cycle is carried out in the 1 step advance/reverse mode, the sequence advances or returns by one step when all these input conditions are met.

(4) System Condition

The test below are used for checking the insufficient condition at the machine side when machine operation stops halfway or the machine fails to operate even when a command is given.

A-TEST FUNCTION

This is the function to check whether unfulfilled conditions will exist or not. The actual input data is compared with the test at each operation step (sequence). If they match, the step will advance to the next.

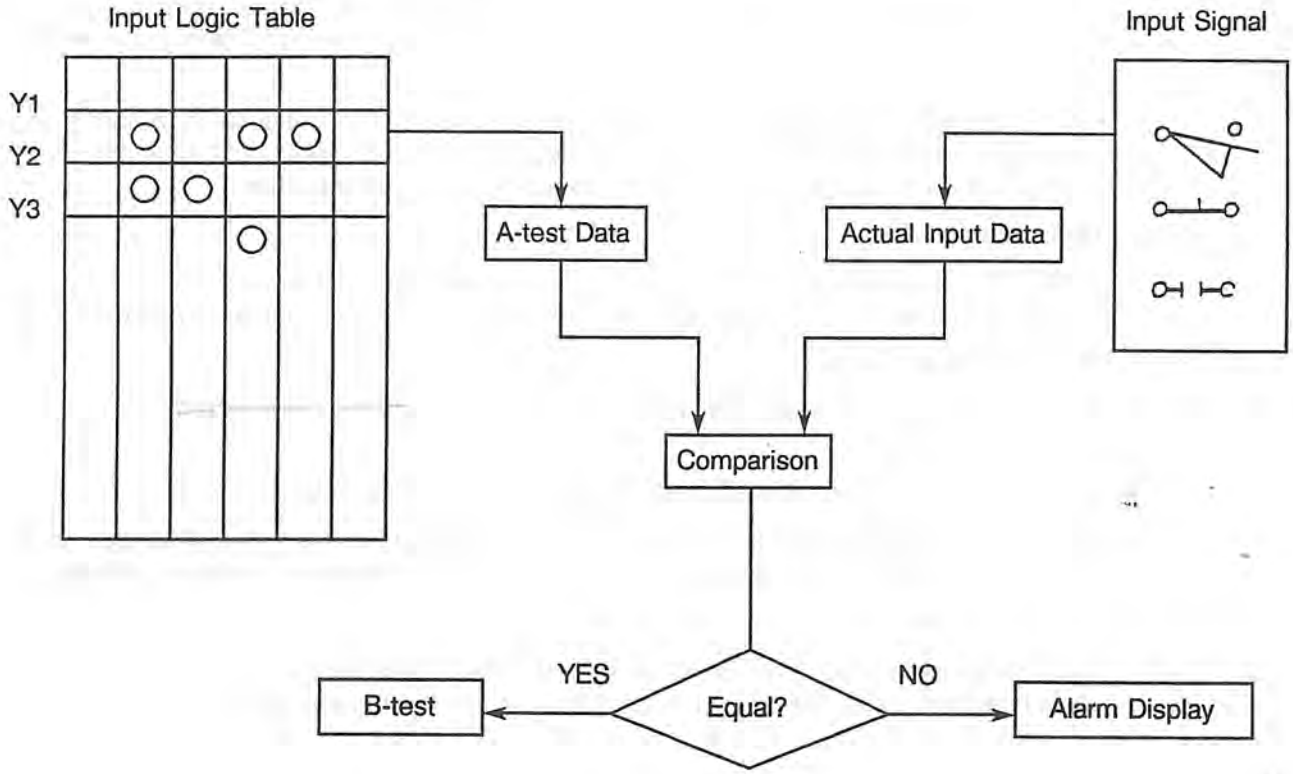

B-TEST FUNCTION

This is the function to check whether there are unnecessary input conditions. The input conditions indicated as B-test data in the Input Logic Table are checked irrespective of the operation sequence number. That is, this interlocks ATC (APC) operation so that the sequence will not advance when operation confirmation devices such as a limit switch stays on. Note that input conditions not indicated as B-test data are not checked.

When there is a discrepancy in A- and B-tests, the alarm message indicated below is displayed on the CRT.

911 ALARM-C ATC system condition [judgment code]
912 ALARM-C APC system condition [judgment code]

For judgment codes, consult the ATC (APC) system condition judgment code table.

(5) How the Operation Sequence Number Advances

At each operation sequence, input conditions are checked and when those indicated in the Input Logic Table are met, the sequence advances to the next if an ATC (APC) command is present. At the next sequence, outputs indicated in the Output Logic Table are given.

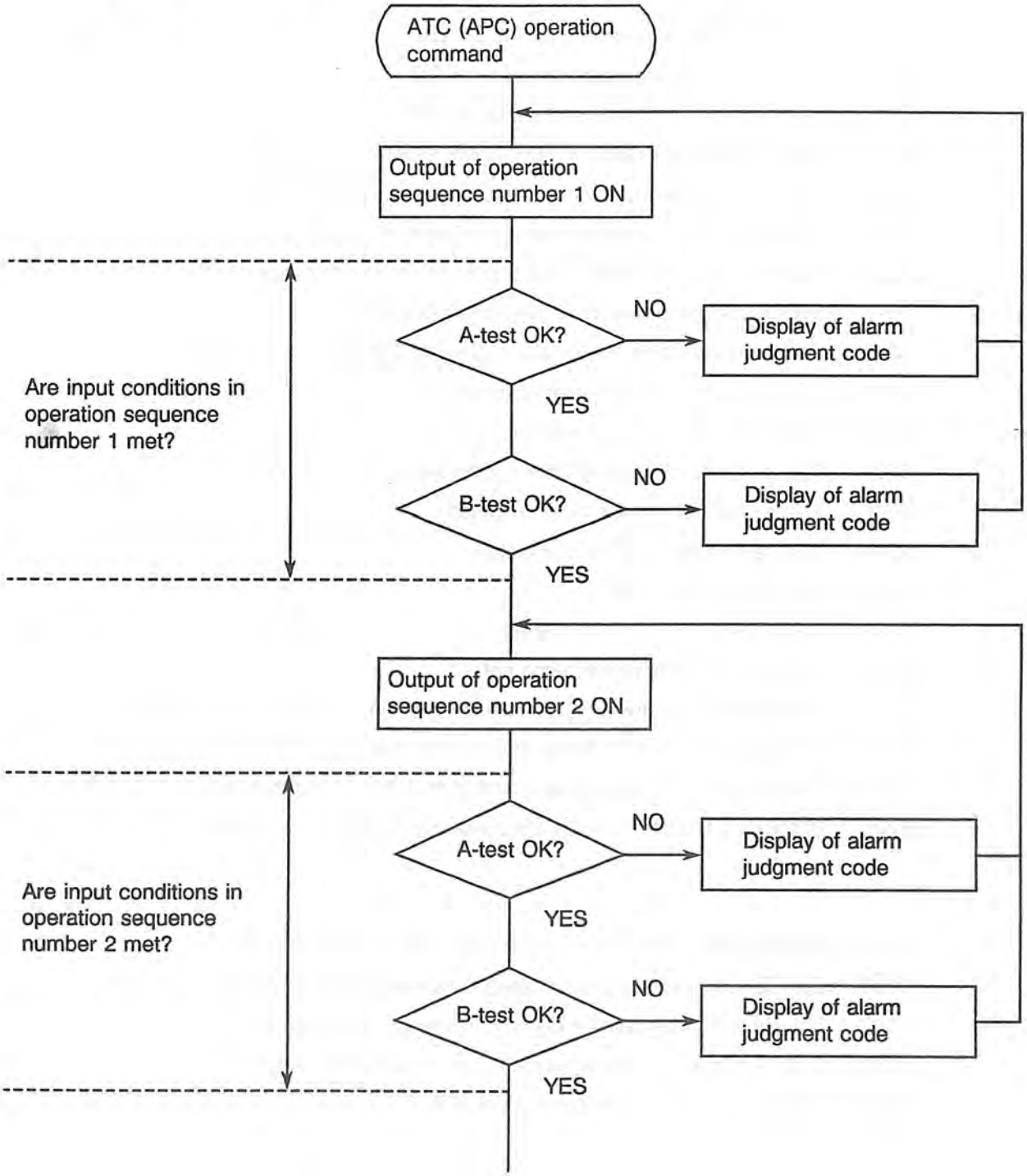

Code Table for ATC System Condition Judgment

The code number below is displayed with the alarm message **"911 ATC system condition"**.

A test

(101) ATC door open confirmation LS is not ON
(102) ATC door close confirmation LS is not ON
(104) LS for checking ATC door close iis not OFF
(110) Spindle tool outer cylinder clamp confirmation LS is not ON
(120) Spindle tool outer cylinder unclamp confirmation LS is not ON
(140) Spindle tool inner cylinder clamp confirmation LS is not ON
(180) Spindle tool inner cylinder unclamp confirmation LS is not ON
(201) SW for checking system air pressure is not ON
(220) No tool in magazine confirmation LS is not ON
(501) ATC door close confirmation LS is not ON
(502) Return pot index is not completed
(540) ATC is interlocked by the LS for detecting no tool in the spindle
(504) Tool retract operation is not completed
(701) Spindle orientation is not completed
(702) Spindle is not at a still
(802) Magazine index is not completed
(808) Dummy tool is set at magazine pot
(901) Positioning to the tool change standby position (HP 1) is not completed
(902) Positioning to the tool change preparation position (HP 2) is not completed
(910) Positioning to the tool change position (HP 5) is not completed
(920) Positioning to the Z-axis retract position (HP 6) is not completed

B test

(1110) Spindle tool outer cylinder clamp confirmation LS is not OFF
(1120) Spindle tool outer cylinder unclamp confirmation LS is not OFF
(1140) Spindle tool inner cylinder clamp confirmation LS is not OFF
(1180) Spindle tool inner cylinder unclamp confirmation LS is not OFF
(1280) Magazine manual interruption is not OFF

Operation Sequence Number	Operation Name \ Input Logic (group-bit, LS Symbol)	1-80 SQ4 Spindle tool inner cylinder unclamp	1-40 SQ5 Spindle tool inner cylinder clamp	1-20 SQ39 Spindle tool outer cylinder unclamp	1-10 SQ40 Spindle tool outer cylinder clamp	1-04 Door not open	1-02 SQ25 Door close	1-01 SQ26 Door open	2-80 Magazine manual interruption ON	2-40 No tool in magazine	2-20 SQ27	2-08 SQ22 No tool in spindle	3-01 SP33 System air pressure normal	5-80 M06 command executing	5-40 No-spindle-tool interlock	5-04 Tool retract completion	5-02 Return pot index	5-01 Door close confirmation	6-20 Next tool exist	6-10 Next tool not exist	6-08 Current tool exist	6-04 Current tool not exist	6-02 Next tool mount	6-01 Current tool store	7-02 Spindle stops	7-01 Spindle orientation completion	8-80 M67 next tool store	8-08 Normal tool in magazine	8-02 Magazine index matched	9-20 HP6 Z-axis retract position	9-10 HP5 Tool change position	9-04 HP2	9-02 HP1 Tool change preparation position	9-01 Tool change standby position	10-01 Step advance interlock
1	Next tool write		O		O																														
2	Return pot index		O		O											O												O	O						
3	Waiting for machining completion		O		O										O																				
4	To the tool change standby position		O		O	O					O										O				O	O								O	
5	To the tool change preparation position		O		O			O			O		O				O								O	O		O	O				O		
6	To the tool change position		O	O				O					O												O	O					O				
7	Spindle tool inner cylinder unclamp	O		O				O					O												O	O					O				
8	To the Z-axis retract position	O		O				O					O						O					O	O	O				O					
9	Next tool index	O		O				O					O												O	O		O	O	O					
10	To the tool change position	O		O				O																	O	O					O				
11	Spindle tool inner cylinder clamp		O	O				O																	O	O					O				
12	To the tool change preparation position		O		O			O															O		O	O							O		
13	To the tool change standby position		O		O																													O	
14	Tool change cycle completion answer		O		O													O																	O
15	To the Z-axis retract position		O	O				O																O	O	O				O					
16	Spindle tool inner cylinder unclamp	O		O				O																	O	O				O					O
17	Spindle tool inner cylinder clamp		O	O				O																	O	O									
18	To the tool change standby position		O		O			O																	O	O								O	
19	ATC door close		O		O													O																	
20	Tool change cycle completion answer		O		O													O																	O
	B TEST DATA	O	O	O	O				O																										
	AUTO BRANCH DATA																																		
3	Waiting for machining completion→14		O		O																						O								
4	To the tool change standby position→15		O		O			O				O		O								O			O	O								O	
8	To the Z-axis retract position→17	O		O				O						O	O					O				O	O	O				O					
14	Tool change cycle completion answer→1		O		O													O																	
16	Spindle tool inner cylinder unclamp→9	O		O				O																	O	O									
20	Tool change cycle completion answer→1		O		O													O																	

| Operation Sequence Number | Operation Name \ Output Logic | SOL Symbol | 1 | | | | | | | | 2 | | | | | | | | 3 | | | | | | | | 4 | | | | | | | | 5 | | | | | | | | 6 | | | | | | | | 7 | | | | | | | | 8 | | | | | | | | 9 | | | | | | | | 10 | | | | | | | | 11 | | | | | | | | 12 | | | | | | | |
|---|---|---

Manual Interlock

Operation Sequence Number	Operation Name	Step Return Cycle	Return Cycle	1-80 SO4 Spindle tool inner cylinder unclamp	1-40 SO5 Spindle tool outer cylinder clamp	1-20 SQ39 Spindle tool outer cylinder unclamp	1-10 SQ40 Spindle tool outer cylinder clamp	1-02 SQ25 Door close	1-01 SQ28 Door open	2-80 Magazine manual interruption ON	2-20 SQ27 No tool in magazine	2-08 SQ22 No tool in spindle	2-01 SP33 System air pressure normal	5-80 M06 command executing	5-04 Tool retract completion	5-02 Return pot index	5-01 Door close confirmation
1	Next tool write	1	1		O		O										
2	Return pot index	14	14								O				O	O	
3	Waiting for machining completion	13	14														
4	To the tool change standby position	21	14						O								
5	To the tool change preparation position	12	13						O				O				
6	To the tool change position	11	12			O							O				
7	Spindle tool inner cylinder unclamp	10	11	O									O				
8	To the Z-axis retract position	9	10										O				
9	Next tool index	8	9										O				
10	To the tool change position	7	10														
11	Spindle tool inner cylinder clamp	6	11		O												
12	To the tool change preparation position	5	12				O										
13	To the tool change standby position	3	13					O									
14	Tool change cycle completion answer	1	14														
15	To the Z-axis retract position		18			O											
16	Spindle tool inner cylinder unclamp		17	O													
17	Spindle tool inner cylinder clamp		17		O												
18	To the tool change standby position		18				O										
19	ATC door close		19					O									
20	Tool change cycle completion answer		20														
21	Dummy (to the tool change standby position)																
	MANUAL BRANCH DATA																
14	Tool change cycle completion answer→1							O									
15	Spindle tool inner cylinder unclamp→9			O													
20	Tool change cycle completion answer→1							O									
	MANUAL STEP BACK DATA																
2	Return pot index→1																

Operation Sequence Number	Operation Name	6-80	6-40	6-20 Next tool exist	6-10 Next tool not exist	6-08 Current tool exist	6-04 Current tool not exist	6-02 Next tool mount	6-01 Current tool store	7-02 Spindle stops	7-01 Spindle orientation completion	8-80 M67 next tool store	8-08 Normal tool in magazine	8-02 Magazine index matched	9-20 HP6 Z-axis retract position	9-10 HP5 Tool change position	9-02 HP1 Tool change preparation position	9-01 HP2 Tool change standby position	10-01 Step advance interlock
1	Next tool write																		
2	Return pot index												O	O					
3	Waiting for machining completion																		
4	To the tool change standby position									O	O							O	
5	To the tool change preparation position												O	O			O		
6	To the tool change position	O							O							O			
7	Spindle tool inner cylinder unclamp																		
8	To the Z-axis retract position								O						O				
9	Next tool index												O	O					
10	To the tool change position		O													O			
11	Spindle tool inner cylinder clamp																		
12	To the tool change preparation position							O									O		
13	To the tool change standby position																	O	
14	Tool change cycle completion answer																		O
15	To the Z-axis retract position								O						O				
16	Spindle tool inner cylinder unclamp																		O
17	Spindle tool inner cylinder clamp																		
18	To the tool change standby position																	O	
19	ATC door close																		
20	Tool change cycle completion answer																		O
21	Dummy (to the tool change standby position)																	O	
	MANUAL BRANCH DATA																		
14	Tool change cycle completion answer→1																		
15	Spindle tool inner cylinder unclamp→9																		
20	Tool change cycle completion answer→1																		
	MANUAL STEP BACK DATA																		
2	Return pot index→1																		

Code Table for Parallel Type 2-pallet APC System Condition Judgment

The code number below is displayed with the alarm message **"912 APC system condition"**.

A test

(104) Pallet clamp confirmation LS is not ON
(108) Pallet unclamp confirmation LS is not ON
(110) Pallet seating confirmation pressure switch is not ON
(140) APC door open confirmation LS is not ON
(201) Setup position B-pallet exist confirmation LS is not ON
(202) Setup position A-pallet exist confirmation LS is not ON
(204) Setup position B-pallet exist confirmation LS is not OFF
(208) Setup position A-pallet exist confirmation LS is not OFF
(210) Pallet travel standby position confirmation LS is not ON
(220) Pallet travel setup position confirmation LS is not ON
(310) Standby position B-pallet exist confirmation LS is not ON
(320) Standby position A-pallet exist confirmation LS is not ON
(340) Standby position B-pallet exist confirmation LS is not OFF
(380) Standby position A-pallet exist confirmation LS is not OFF
(801) Work ready completion button is not pressed
(904) Positioning to pallet change position (HP 3) is not completed
(908) Positioning to pallet change position (HP 4) is not completed
(B01) Positioning to shifter unloading position is not completed
(B02) Positioning to shifter loading position is not completed

B test

(1104) Pallet clamp confirmation LS is not OFF
(1104) Pallet unclamp confirmation LS is not OFF
(1104) Pallet travel setup position confirmation LS is not OFF

Operation Sequence Number	Operation Name \ Input Logic	1: APC door open (SD1C)	1: Pallet seating (SP11)	1: Pallet unclamp (SD4C)	1: Pallet clamp (SD3C)	2: Manual interruption (SA1C)	2: Pallet travel setup position (SD1B)	2: Pallet travel standby position (SD3C)	2: Setup position A pallet none	2: Setup position B pallet none	2: Setup position A pallet exist (SD7C)	2: Setup position B pallet exist (SD8C)	3: Standby position A pallet none	3: Standby position B pallet none (SD5C)	3: Standby position A pallet exist (SD6C)	3: Standby position B pallet exist	8: Work loading check	9: B-side APC position (HP4)	9: A-side APC position (HP3)	10: Step retract interlock	10: Step advance interlock	11: Shifter loading	11: Shifter unloading
1	APC preparation						O		O			O											
2	A-APC travel position (HP3)						O										O			O			
3	APC door open						O										O						
4	Pallet unclamp	O		O			O										O		O				
5	Pallet travel standby position	O		O				O					O				O						
6	Pallet unloading	O		O				O								O	O						
7	B-APC travel position (HP4)	O		O				O									O						O
8	Pallet loading	O		O				O									O	O					O
9	Pallet travel setup position	O		O			O				O						O					O	
10	Pallet clamp	O					O										O					O	
11	APC door close		O		O		O										O						
12	APC preparation						O			O	O												
13	B-APC travel position (HP4)						O										O						
14	APC door open						O										O						
15	Pallet unclamp	O		O			O										O	O					
16	Pallet travel standby position	O		O				O						O			O						
17	Pallet unloading	O		O				O							O		O						
18	A-APC travel position (HP3)	O		O				O									O						O
19	Pallet loading	O		O				O									O		O				O
20	Pallet travel setup position	O		O			O					O					O					O	
21	Pallet clamp	O					O										O					O	
22	APC door close		O		O		O										O						
																					O		
	B TEST DATA					O	O	O															
	AUTO BRANCH DATA																						
22	APC door open→1		O		O		O																

Operation Sequence Number	Operation Name \ Output Logic	1-10 Pallet air blow (YW 7C)	1-08 Pallet unclamp (YW 4C)	1-04 Pallet clamp (YW3C)	2-20 Pallet travel setup position (YW6C)	2-10 Pallet travel standby position (YW5C)	6-08 B-side APC position (HP4)	6-04 A-side APC position (HP3)	7-02 APC door open	7-01 Work ready check reset	9-10 Step retract prohibited	9-08 NC answer back	9-04 Auto branch	9-02 No. 2 step timer	9-01 No. 1 step timer	10-80 APC start position	10-10 B-axis travel prohibited	10-04 Z-axis travel prohibited	10-02 Y-axis travel prohibited	10-01 X-axis travel prohibited	11-02 Shifter loading	11-01 Shifter unloading
1	APC preparation			O	O						O					O						
2	A-APC travel position (HP3)			O	O			O														
3	APC door open			O	O			O	O													
4	Pallet unclamp	O	O		O				O									O	O	O		
5	Pallet travel standby position	O	O			O			O									O	O	O		
6	Pallet unloading	O	O			O			O									O	O	O		O
7	B-APC travel position (HP4)		O			O	O		O									O		O		
8	Pallet loading	O	O			O	O		O									O	O	O	O	
9	Pallet travel setup position	O	O		O		O		O									O	O	O	O	
10	Pallet clamp	O		O	O		O		O									O	O	O		
11	APC door close	O		O	O					O		O						O	O	O		
12	APC preparation			O	O						O					O						
13	B-APC travel position (HP4)			O	O		O															
14	APC door open			O	O		O		O													
15	Pallet unclamp	O	O		O				O									O	O	O		
16	Pallet travel standby position	O	O			O			O									O	O	O		
17	Pallet unloading	O	O			O			O									O	O	O		O
18	A-APC travel position (HP3)		O			O		O	O									O		O		
19	Pallet loading	O	O			O		O	O									O	O	O	O	
20	Pallet travel setup position	O	O		O			O	O									O	O	O	O	
21	Pallet clamp	O		O	O			O	O									O	O	O		
22	APC door close	O		O	O					O		O	O					O	O	O		

Manual interlock

Operation Sequence Number	Operation Name	Step retract cycle	Return cycle	1-80 APC door open	1-20 Pallet seating	1-10 Pallet unclamp	1-08 Pallet clamp	2-80 Manual interruption	2-40 Pallet travel setup position	2-20 Pallet travel standby position	2-10 Setup position A-pallet none	2-08 Setup position B-pallet none	2-04 Setup position A-pallet exist	2-02 Setup position B-pallet exist	2-01 Standby position A-pallet none	3-80 Standby position B-pallet none	3-40 Standby position A-pallet exist	3-20 Standby position B-pallet exist	8-01 Work loading check reset	9-10 B-side APC position	9-08 A-side APC position	10-02 Step retract interlock	10-01 Step advance interlock	11-02 Shifter loading	11-01 Shifter unloading
1	APC preparation	1	1						O		O			O											
2	A-APC travel position (HP3)	22	22																		O				
3	APC door open	21	22	O																					
4	Pallet unclamp	20	21			O																			
5	Pallet travel standby position	19	20							O					O										
6	Pallet unloading	18	19														O								O
7	B-APC travel position (HP4)	17	7	O																O					
8	Pallet loading	16	8																					O	
9	Pallet travel setup position	15	9						O				O												
10	Pallet clamp	14	10		O		O																		
11	APC door close	13	11																				O		
12	APC preparation	12	12						O			O	O												
13	B-APC travel position (HP4)	11	11																	O					
14	APC door open	10	11	O																					
15	Pallet unclamp	9	10			O																			
16	Pallet travel standby position	8	9							O						O									
17	Pallet unloading	7	9															O							O
18	A-APC travel position (HP3)	6	18	O																	O				
19	Pallet loading	5	19																					O	
20	Pallet travel setup position	4	20						O					O											
21	Pallet clamp	3	21		O		O																		
22	APC door close	2	22																				O		
	MANUAL STEP BRANCH																								
11	APC door close→12																								
22	APC door close→1																								
	MANUAL STEP BACK																								
2	A-APC travel position(HP3)→1																								
13	B-APC travel position(HP4)→12																								

SECTION 7 ARRANGEMENTS OF ELECTRICAL PARTS OPERATION PANELS, AND THE LIKE

1. OSP5020M/OSP500M-G Electrical Spare Parts List

Part Name	Part No.	Type and Dimensions	Q'ty	Maker	Remarks
Spare parts box	E8040-090-174 (A254-7006)	140H × 230W × 55L TP-255H (H1-PS)	1	Tokai plastic	
Lamp	E3580-031-002 (306E)	T13 18V 2W E12	1	Izumi	For **POWER ON** switch
Fuse	E2442-290-111 (For EC I/O rack)	F7142 0.1 A Glass-tube filled fuse element	1	Hagiwara	Accessory for EC I/O rack
Fuse	E2442-290-104 (For tape handler)	No. 1065 0.5 A	1	Sanyo	Accessory for tape handler
Fuse	E2442-727-003 (A006-1250)	F.G.B.O.5A Glass-tube filled fuse element Ø6.4 × 30 mm	2	Fuji Tanshi	BL-ACT-SP spare parts
Fuse	E2445-392-228 (A006-1250)	SMP32 3.2A	2	Daito Tsushin	BL-ACT-SP spare parts
Fuse	E2445-392-215 (A006-1250)	MP50 5A MELSEC-K1.K	1	Daito Tsushin	BL-ACT-SP spare parts
Terminal	E5521-082-078 (306E)	170330-1 Terminal	10	AMP	0.2 - 0.5 mm^2
Terminal	E5521-082-079 (306E)	170332-1 Terminal	10	AMP	0.75 - 2 mm^2
Terminal	E5521-082-080 (306E)	172074-1 Housing	20	AMP	

2. NC Operation Panel (OSP5020M)

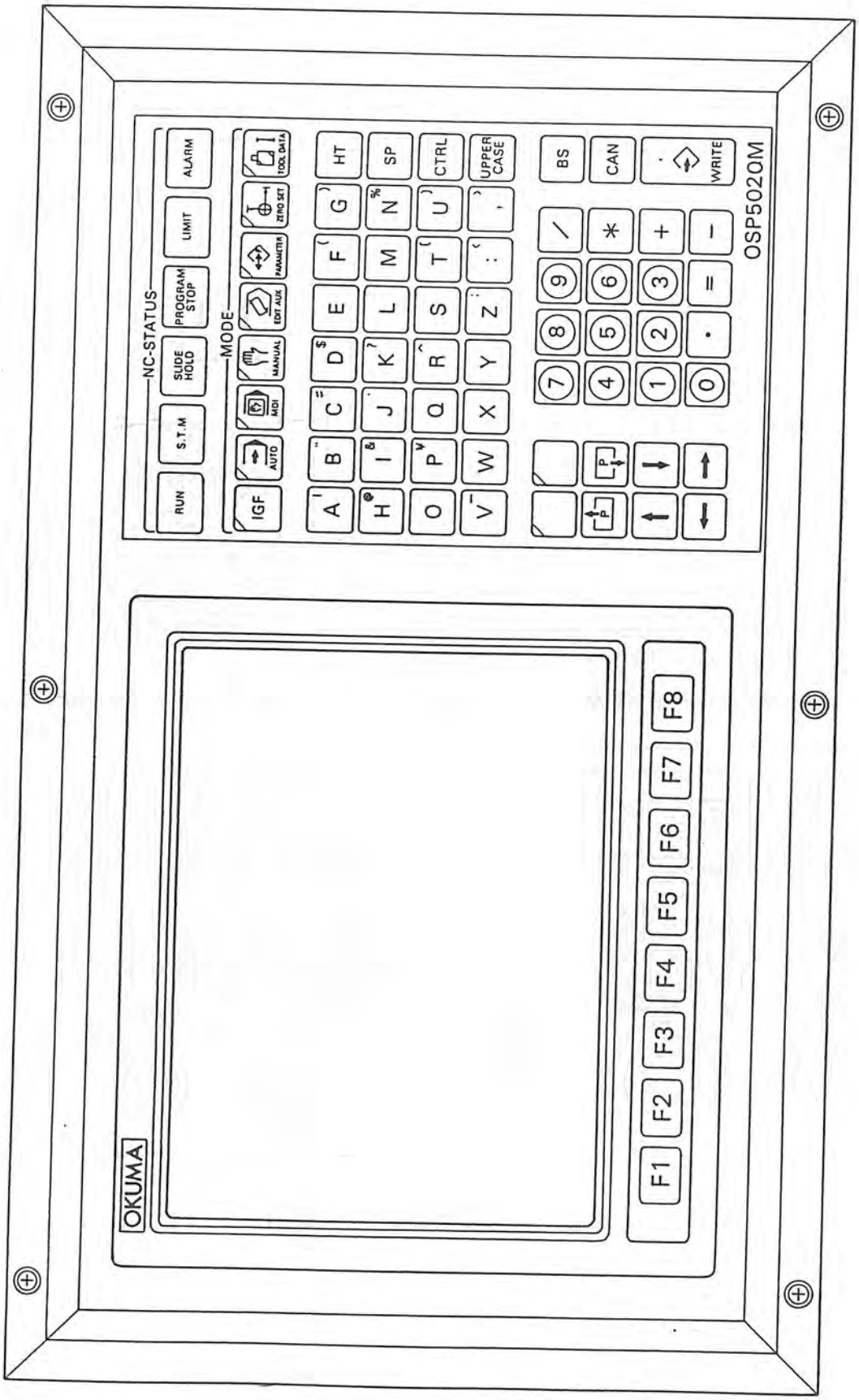

3. NC Operation Panel

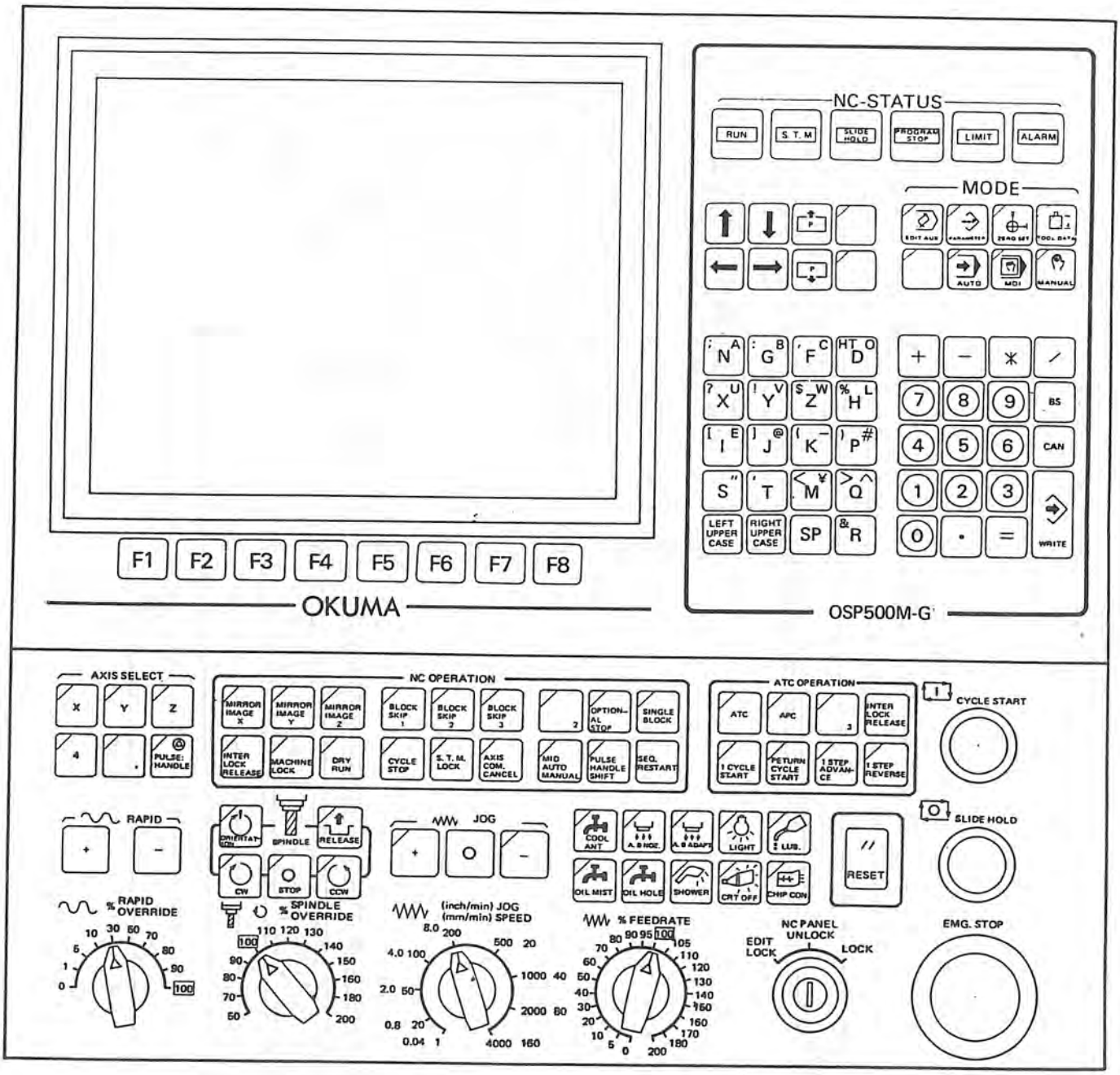

4. Machine Operation Panel (OSP5020M)

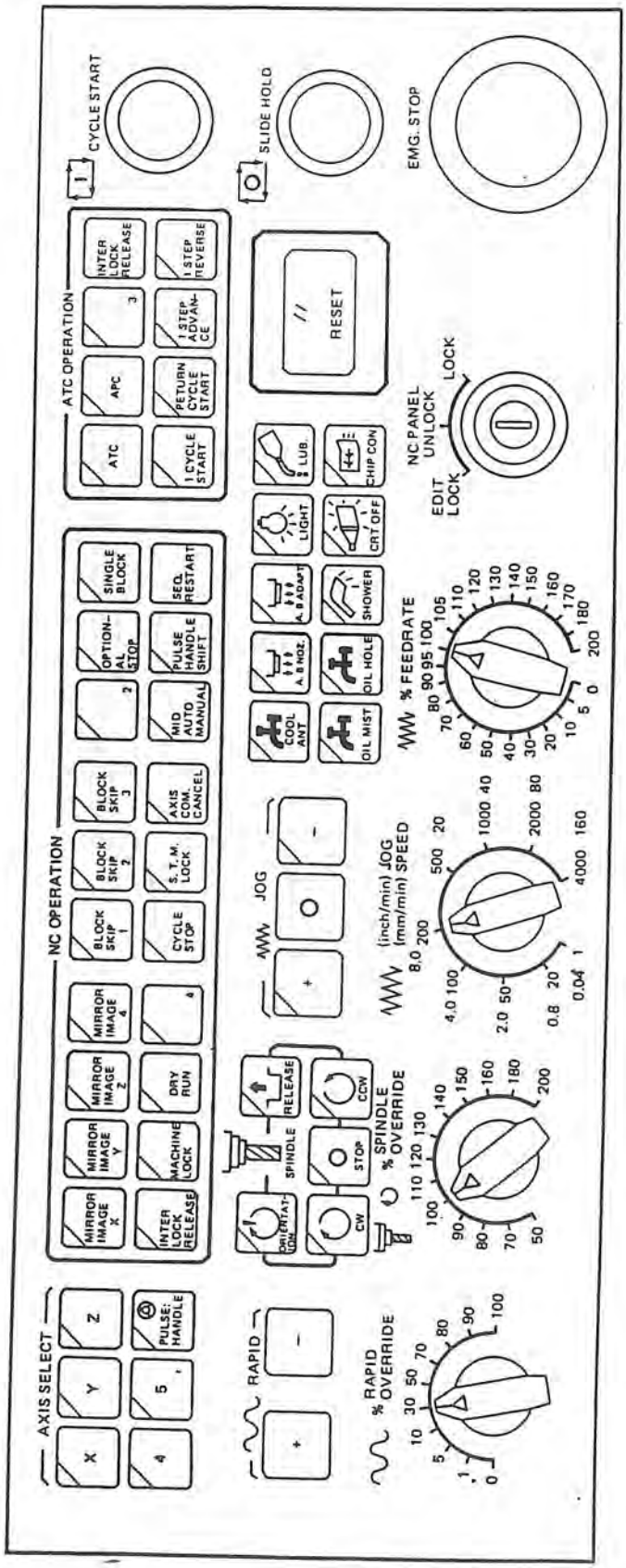

5. Pulse Handle

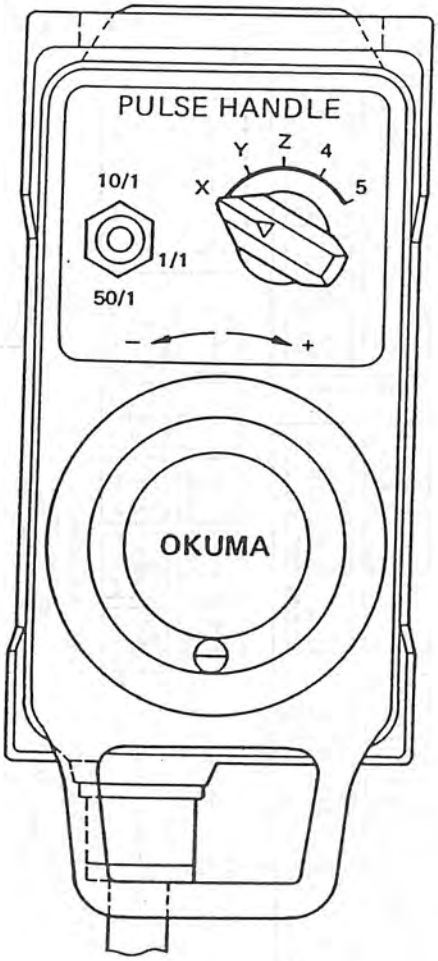

6. Operation Panel (Power On)

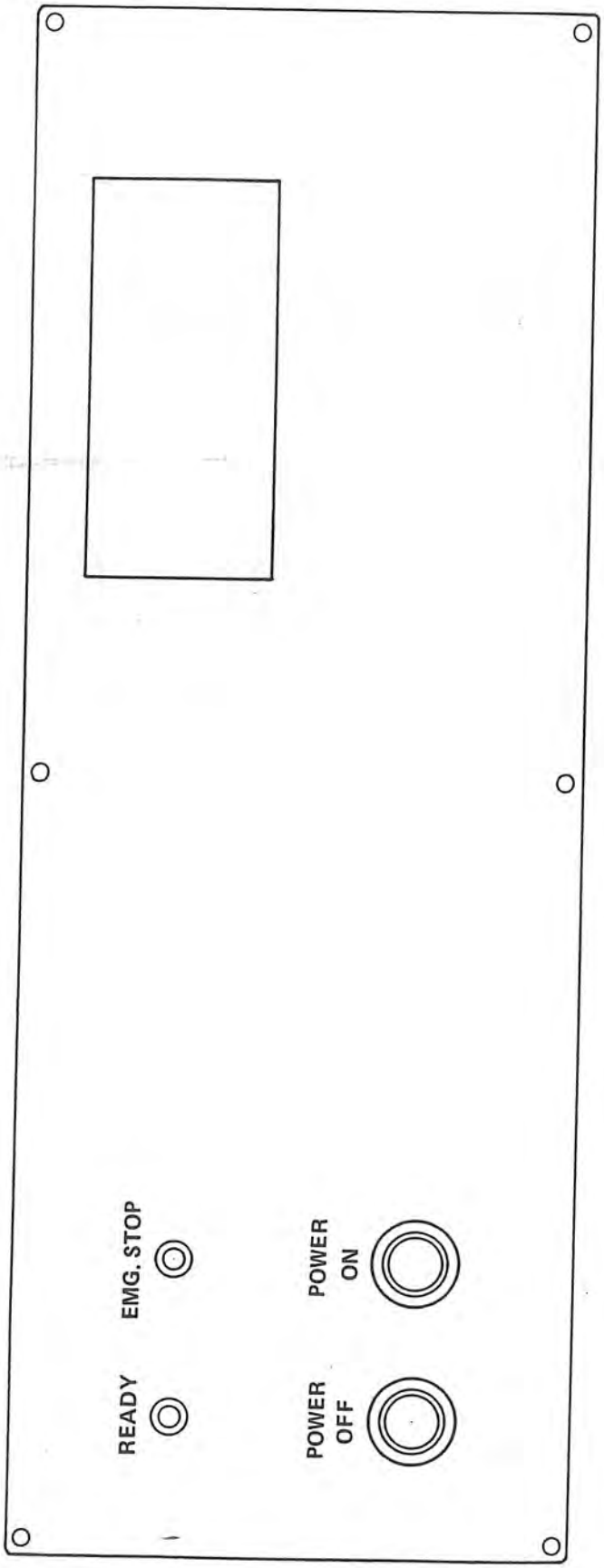

7. Manual Tool Change Operation Panel

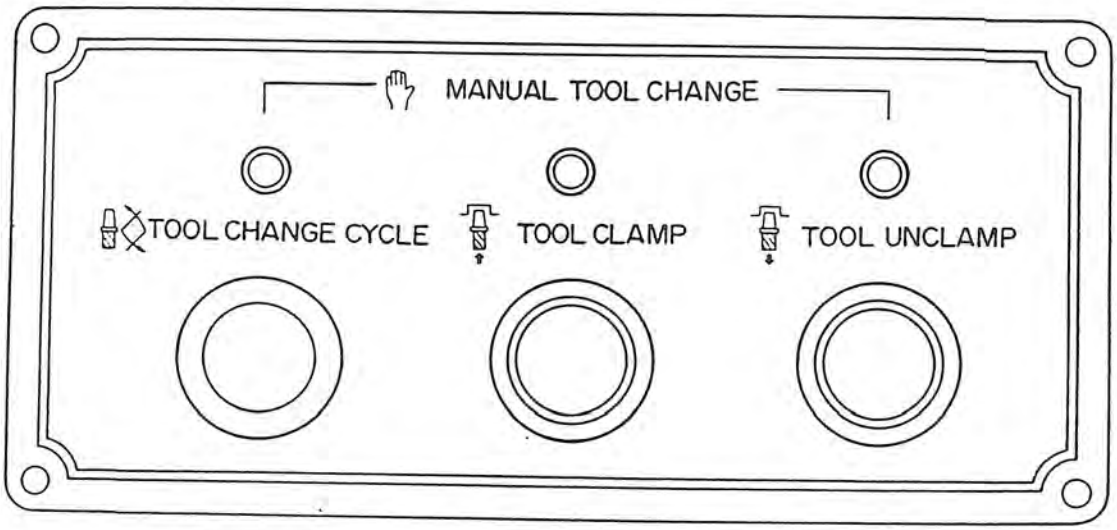

8. Magazine Manual Operation Panel

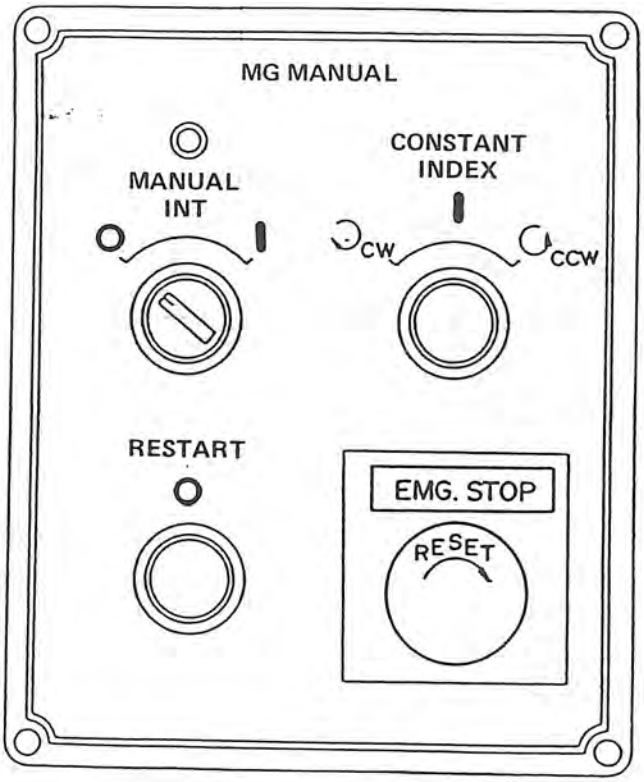

9. APC Operation Panel for Parallel Type 2-pallet APC

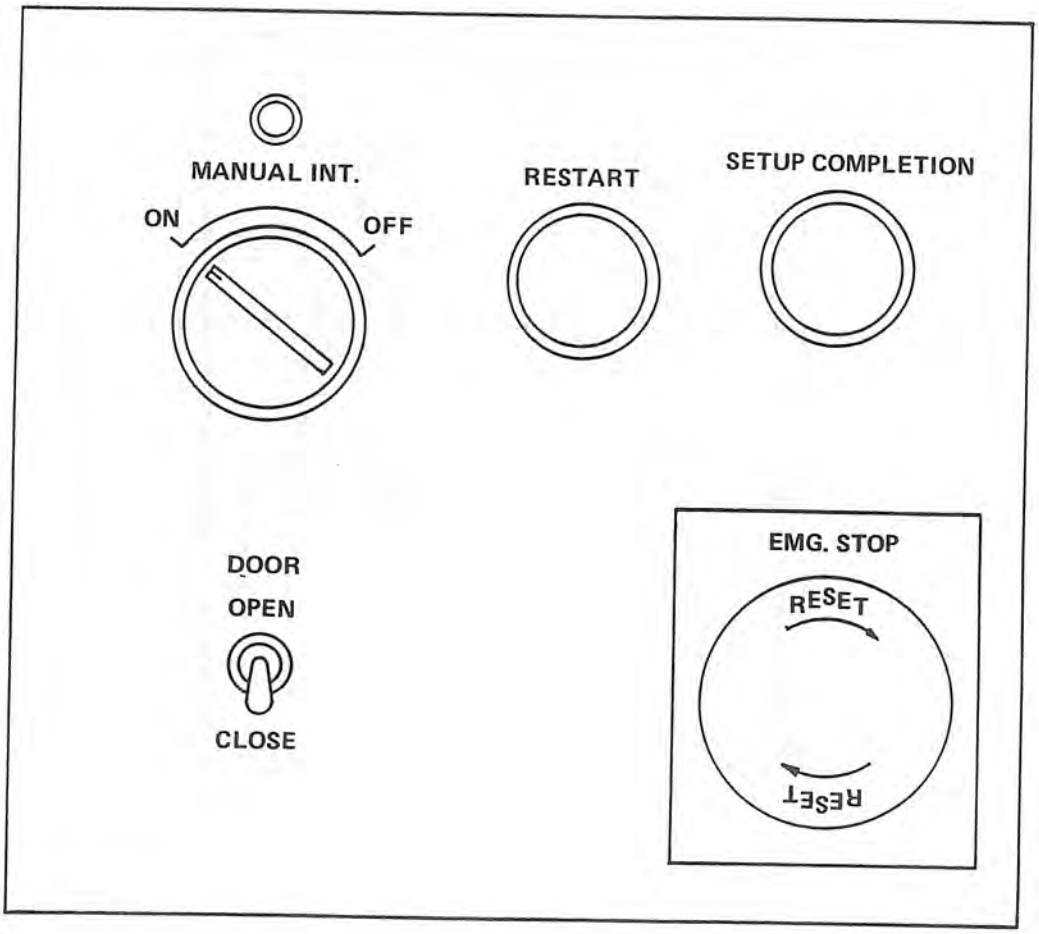

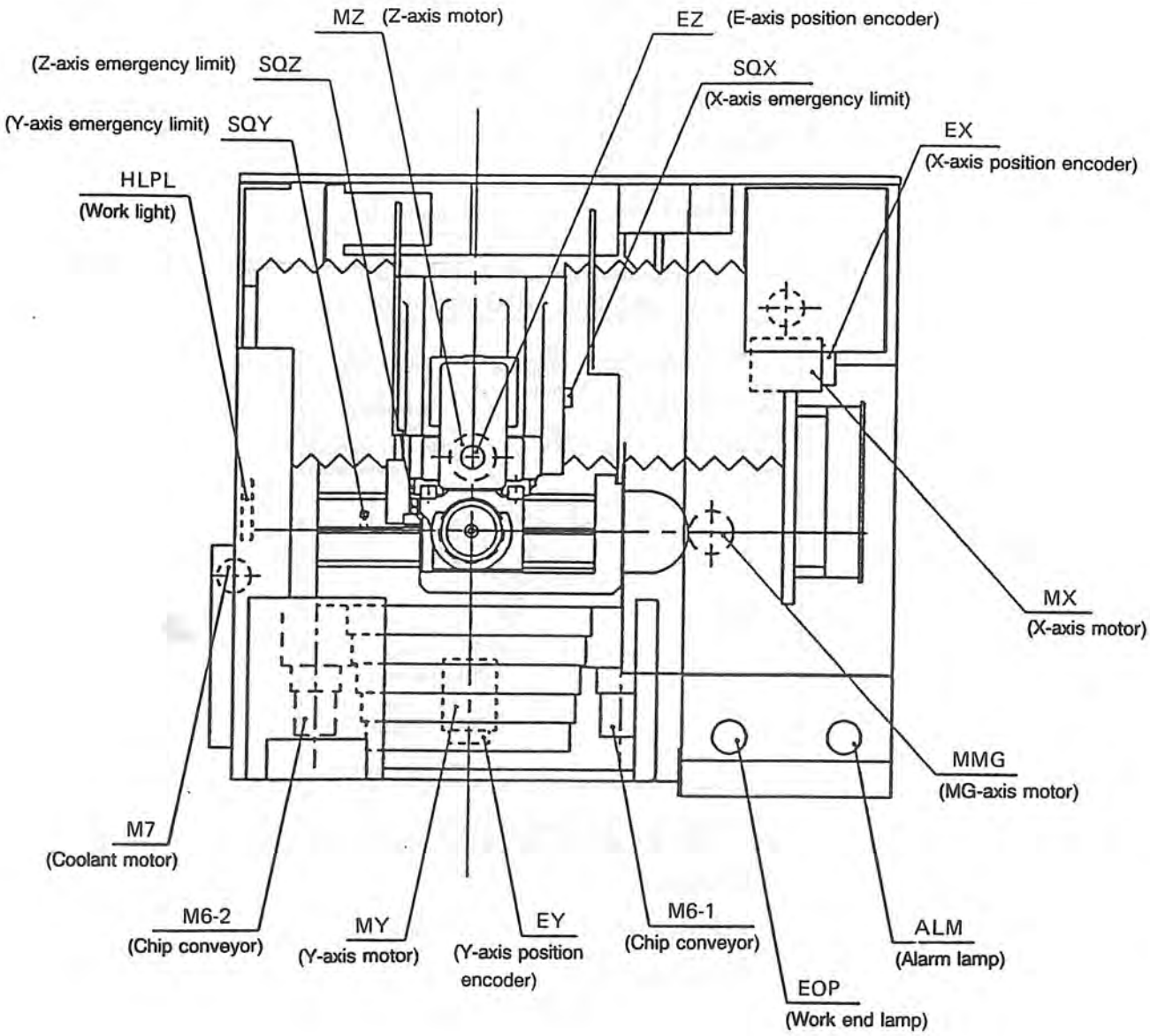
MZ (Z-axis motor)
EZ (E-axis position encoder)
(Z-axis emergency limit) SQZ
SQX
(X-axis emergency limit)
(Y-axis emergency limit) SQY
EX
(X-axis position encoder)
HLPL
(Work light)
MX
(X-axis motor)
MMG
(MG-axis motor)
M7
(Coolant motor)
M6-2
(Chip conveyor)
MY
(Y-axis motor)
EY
(Y-axis position encoder)
M6-1
(Chip conveyor)
ALM
(Alarm lamp)
EOP
(Work end lamp)

Arrangement of Limit Switches and Solenoid Valves - ATC Magazine

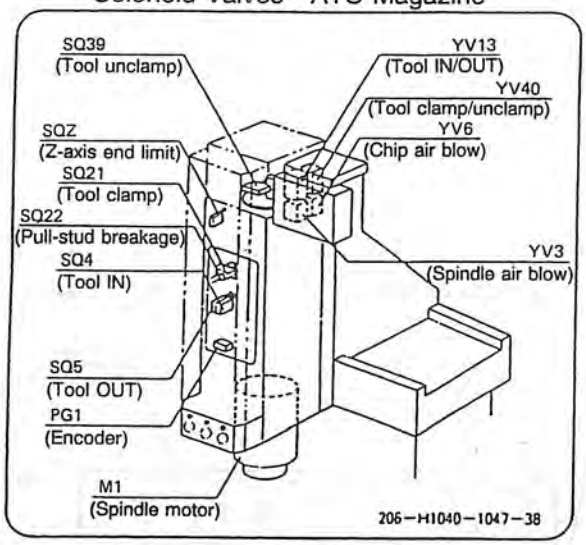

Arrangement of Limit Switches and Solenoid Valves - ATC Magazine

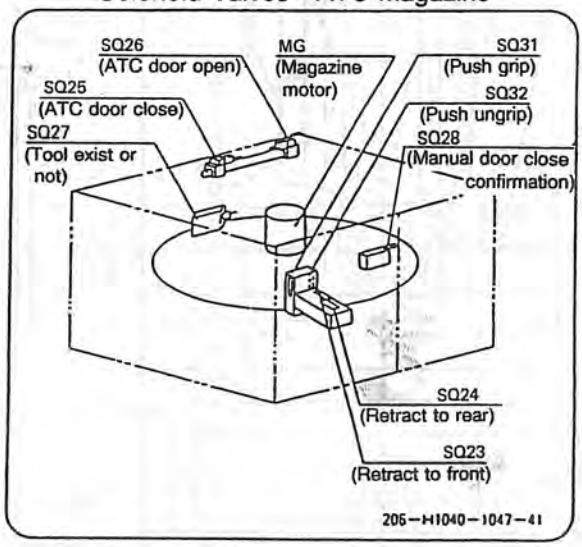

Arrangement of Solenoid Valves - ATC

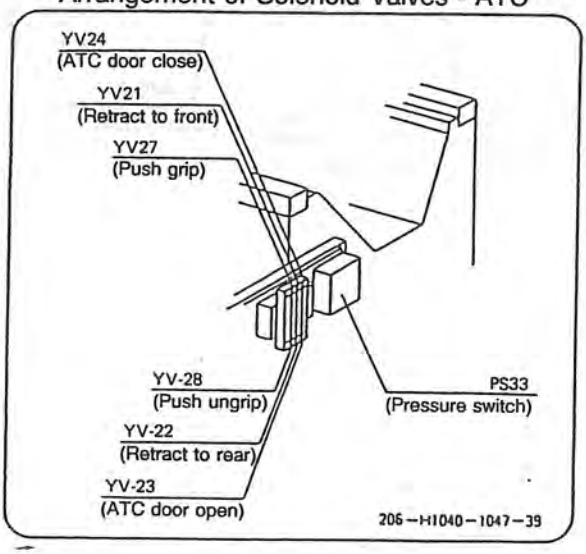

LIST OF PUBLICATIONS

Publication No.	Date	Edition
3611-E	January 1992	1st
3611-E-R1	October 1992	2nd B

This manual may be at variance with the actual product due to specification or design changes.
Please also note that specifications are subject to change without notice.
If you require clarification or further explanation of any point in this manual, please contact your OKUMA representative.

user

	X	Y	Z
P	281.	286.	451.
N	-281.	-286	-1
P	281.00	286	451
N	-11	-11	-11